GUILD ◆ EDITION

Woodsmith®

Woodsmith.com

Vol. 39 / No. 234

PLYWOOD SHOP PROJECTS

Strong Joinery for Easy Drawers

Workholding Solutions for the Drill Press

Get More from Your Router Table

Woodsmith®

EDITOR Vincent Ancona
MULTIMEDIA EDITOR Phil Huber
ASSOCIATE EDITOR Robert Kemp
ASSISTANT EDITORS Erich Lage, Logan Wittmer

EXECUTIVE ART DIRECTOR Todd Lambirth
SENIOR ILLUSTRATORS Harlan V. Clark, Dirk Ver Steeg, Peter J. Larson
SENIOR GRAPHIC DESIGNER Bob Zimmerman
GRAPHIC DESIGNER Becky Kralicek

CREATIVE DIRECTOR Chris Fitch
PROJECT DESIGNERS Dennis Volz, Dillon Baker
PROJECT DESIGNER/BUILDER John Doyle
CAD SPECIALIST Steve Johnson
SHOP CRAFTSMAN Dana Myers

SENIOR PHOTOGRAPHER Crayola England
ASSOCIATE STYLE DIRECTOR Rebecca Cunningham
SENIOR ELECTRONIC IMAGE SPECIALIST Allan Ruhnke
PRODUCTION ASSISTANT Minniette Johnson

FOUNDING PUBLISHER Donald B. Peschke

Woodsmith® (ISSN 0164-4114) is published bimonthly by Cruz Bay Publishing, Inc., 2143 Grand Ave, Des Moines, IA 50312.
Woodsmith® is a registered trademark of Cruz Bay Publishing.
Copyright© 2017 Cruz Bay Publishing, Inc. All rights reserved.
Subscriptions: Single copy: $6.95.
Canadian Subscriptions: Canada Post Agreement No. 40038201. Send change of address information to PO Box 881, Station Main, Markham, ON L3P 8M6. Canada BN 82564 2911
Periodicals Postage Paid at Des Moines, IA, and at additional offices.
Postmaster: Send change of address to *Woodsmith*, Box 37274, Boone, IA 50037-0274.

Printed in U.S.A.

WoodsmithCustomerService.com

ONLINE SUBSCRIBER SERVICES

- **VIEW** your account information
- **RENEW** your subscription
- **CHECK** on a subscription payment
- **PAY** your bill
- **CHANGE** your mailing or e-mail address
- **VIEW/RENEW** your gift subscriptions
- **TELL US** if you've missed an issue

CUSTOMER SERVICE Phone: 800-333-5075 weekdays

SUBSCRIPTIONS
Customer Service
P.O. Box 842
Des Moines, IA 50304-9961
subscriptions@augusthome.com

EDITORIAL
Woodsmith Magazine
2143 Grand Avenue
Des Moines, IA 50312
woodsmith@woodsmith.com

ACTIVE INTEREST MEDIA

PRESIDENT & CEO **Andrew W. Clurman**
SENIOR VICE PRESIDENT, TREASURER & CFO **Michael Henry**
EXECUTIVE VICE PRESIDENT, OPERATIONS **Patricia B. Fox**
CHIEF INNOVATION OFFICER **Jonathan Dorn**

from the editor

Sawdust

In the last issue of Woodsmith, I mentioned that we are working on some new ideas. Well, I'm excited to give you an update on a couple of these. First, we're rolling out a new and improved version of the *Woodsmith* Video Edition. As the name implies, this is an online, video version of the magazine where the pages of *Woodsmith* come to life in video form. As a subscriber to the video edition, you'll be able to see our editors, illustrators, and project designers present weekly projects, techniques, and woodworking tips taken straight from the magazine. To learn more about the Video Edition and how to subscribe, simply go to *woodsmithvideoedition.com*.

In addition to the Video Edition, we're making it easier for you to keep up on all the happenings at *Woodsmith* in between each issue. You can now follow us on Facebook, YouTube, Instagram, Pinterest, and even Twitter. I have to admit that a lot of this social media stuff is completely new to me. But fortunately, we have several people on our staff who are better versed in these things than I am.

NEW FACE. Speaking of our staff, I'm pleased to announce that Logan Wittmer has joined our team as an assistant editor. Logan has been a fan of *Woodsmith* for many years, and he's extremely passionate and enthusiastic about woodworking (among other things). Welcome aboard, Logan.

Vince

STATEMENT OF OWNERSHIP, MANAGEMENT, AND CIRCULATION
(Required by 39 U.S.C. 3685)

1. Publication Title: *Woodsmith*. 2. Publication No.: 0164-4114 3. Filing Date: September 18, 2017. 4. Issue Frequency: Bimonthly. 5. No. of issues published annually: 6 (six). 6. Annual subscription price: $29.00. 7. Complete mailing address of known office of publication: 2143 Grand Avenue, Des Moines, (Polk County), Iowa 50312-5306. 8. Complete mailing address of the headquarters or general business offices of the publisher: 2143 Grand Avenue, Des Moines, (Polk County), Iowa 50312-5306. 9. Full names and complete mailing addresses of publisher, editor, and managing editor: Publisher: Cruz Bay Publishing, 2143 Grand Avenue, Des Moines, Iowa 50312; Editor: Vincent Ancona, 2143 Grand Avenue, Des Moines, Iowa 50312; Managing Editor: Vincent Ancona, 2143 Grand Avenue, Des Moines, Iowa 50312. 10. Owner: Cruz Bay Publishing, 300 N. Continental Blvd, Suite 650, El Segundo, CA 90245. 11. Known bondholders, mortgagees, and other security holders owning 1 percent or more of total amount of bonds, mortgages or other securities: None. 12. (Does not apply.) 13. Publication Title: *Woodsmith*. 14. Issue Date for Circulation Data Below: August/September 2017 15. Extent and nature of circulation:

	Average no. copies each issue during preceding 12 months	Average no. copies of single issue published nearest to filing date
A. Total number of copies (net press run)	183,745	178,179
B. Paid circulation (by mail and outside the mail):		
1. Paid/requested outside-county mail subscriptions stated on PS Form 3541	138,712	133,067
2. Mailed in-county paid subscriptions stated on PS Form 3541	0	0
3. Paid distrib. outside the mails (sales through dealers/carriers, street vendors, counter sales, and other paid distrib. outside USPS)	13,755	13,487
4. Paid distribution by other classes of mail through the USPS	0	0
C. Total paid distribution	152,467	146,554
D. Free or nominal rate distribution (by mail and outside the mail)		
1. Free or nominal rate outside-county copies included on PS form 3541	1,485	1,679
2. Free or nominal rate in-county copies included on PS Form 3541	0	0
3. Free or nominal rate copies mailed at other classes through the USPS	0	0
4. Free or nominal rate distribution outside the mail (carriers or other means)	0	0
E. Total free or nominal rate distribution	1,485	1,679
F. Total distribution	153,952	148,233
G. Copies not distributed	29,792	29,946
H. Total	183,744	178,179
I. Percentage paid and/or requested circulation	99.04%	98.87%
16. Electronic Copy Circulation; Woodsmith		
A. Paid Electronic Copies	389	326
B. Total paid print copies + paid electronic copies	152,856	146,880
C. Total print distribution + paid electronic copies	154,341	148,559
D. Percentage paid (both print and electronic copies)	99.04%	98.87%

I certify that 50% of all my distribution copies (electronic and print) are paid above a nominal price.
17. Publication of Statement of Ownership. Will be printed in the Dec./Jan. 2018 (#234) issue of this publication.
18. I certify that all information furnished on this form is true and complete. (signed) Vincent Ancona, Editor

On occasion, we allow companies whose products and services may be of interest to you to send advertising mail to our subscribers. We are careful to choose ethical companies that have information of genuine interest to our subscribers. Most of our subscribers appreciate these materials. However, if you prefer to have your name deleted from the mailing list made available to other companies, please write to us at Woodsmith, 2143 Grand Avenue, Des Moines, IA 50312

contents

No. 234 December/January 2018

Projects

weekend project

Salt & Pepper Set 18

If you're looking for a fun project for your lathe, this salt and pepper set may just fill the bill. Make one for yourself and maybe a few more to give away as gifts.

shop project

Drawing Table 22

With a tilting top and built-in lighting, this combination drawing table and light box is a practical answer to your project designing needs. Use it at a desk or at the workbench.

designer project

Sofa Table 28

The joinery used on this handsome table is reminiscent of post and beam barn construction. But it's just the right size to tuck behind a sofa or in an entryway.

shop project

5 Plywood Shop Projects 36

Build a complete, basic shop without spending a fortune with these five plywood projects. In this issue, we'll cover building the workbench and storage shelf.

heirloom project

Greene & Greene-Style Bookcase 42

This bookcase has all the hallmarks of Greene and Greene designed furniture, from ebony plugs to cloud-lift door frames to the oversized box-joints used on the drawers.

Departments

from our readers
Tips & Techniques 5

all about
Ebony. 10

router workshop
Using Rub Arms. 12

great gear
Handling Sheet Goods 14

woodworking technique
Fast & Easy Drawers 16

woodworking technique
Making Square Plugs. 56

working with tools
Workholding at the Drill Press . . 58

woodworking essentials
Why You Need a Planer. 60

mastering the table saw
Specialty Blades 62

tips from our shop
Shop Notes. 64

from our readers

Tips & Techniques

A locking pin allows the sander to be rotated to different positions. Simply drop the pin into a predrilled hole to lock it.

Sander Turntable

As any woodworker knows, shop space is almost always at a premium. In order to have access to both the disc and belt functions on my combo sander, I had to come up with a creative solution. As you can see in the photo at right, an oversized turntable was the answer.

LOCKING IT IN PLACE. The sander itself is mounted to the turntable with short lag screws. In order to keep the top from spinning while in use, I drilled two different holes for dedicated stops. With the sander positioned where I wanted it, I clamped the top platform in place. I then drilled a hole through the top into the base. Through this hole, I insert a bolt with the threads cut off to lock the sander in place. The process is repeated with the sander in the other position.

CONSTRUCTION. For the top and bottom of the turntable, I cut out two large plywood discs on the band saw using a circle guide. With centers marked, I placed a lazy Susan bearing on the base and marked the location of the mounting holes. I then drilled an oversized access hole through the base. The hole should be slightly larger than the heads of the screws that you use to mount the bearing. The lazy Susan is secured to the base first, then screwed to the top through the access hole in the base. The weight of the sander holds the turntable to the bench.

William Aulick
Cincinnati, Ohio

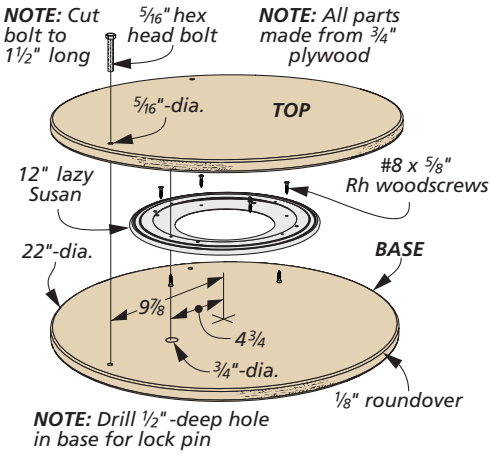

Win This Forrest Blade

Simply send us your favorite shop tips. If your tip or technique is selected as the featured reader's tip, you'll win a *Forrest Woodworker II* blade. To submit your tip or technique, go to *SubmitWoodsmithTips.com*. There you can upload your tips and photos for consideration.

The Winner!

Congratulations to William Aulick, the winner of this *Forrest Woodworker II*. To find out how you can win this blade, check out the information at left.

QUICK TIPS

Dust Cover. *Dan Martin* of *Galena, OH* was tired of cleaning his magnifying light every time he wanted to use it. To solve this problem, he started using a gallon-size resealable bag as a dust protector. The bag protects the light from dust and can be easily removed.

Guide Bushing Installation. In order to ease installation and ensure his guide bushing is tight, *Vince Milewski*, of *San Jose, CA*, reaches for a bicycle pin spanner. The spanner is inserted into two 5/32" holes drilled in the bushing and provides leverage to tighten it down.

Marking on Dark Woods. *Allen Bell* of *Marietta, OH* uses a correction fluid pen to make layout marks on dark wood. The correction fluid offers a high contrast against dark woods and makes marks easier to see. The correction fluid scrapes and sands off easily.

Magazine Storage

In the past, I've stored all of my magazines and catalogs in a filing cabinet. Over the years, the cabinet became completely full. So I came up with a storage solution that uses the wire ribbing from inexpensive file folders (inset photo) and a simple wall-mounted rack. This allows me to store magazines right in the shop where they're close at hand.

To build the wall rack, I started by making two ladder-like assemblies with dowels spaced 2" apart. The ladders are then attached to the edge of the back using a tongue and groove joint. The file folders are readily available for less than 20 cents a piece. It's a cheap solution to store all of your magazines.

Jim Dahlberg
Aztec, New Mexico

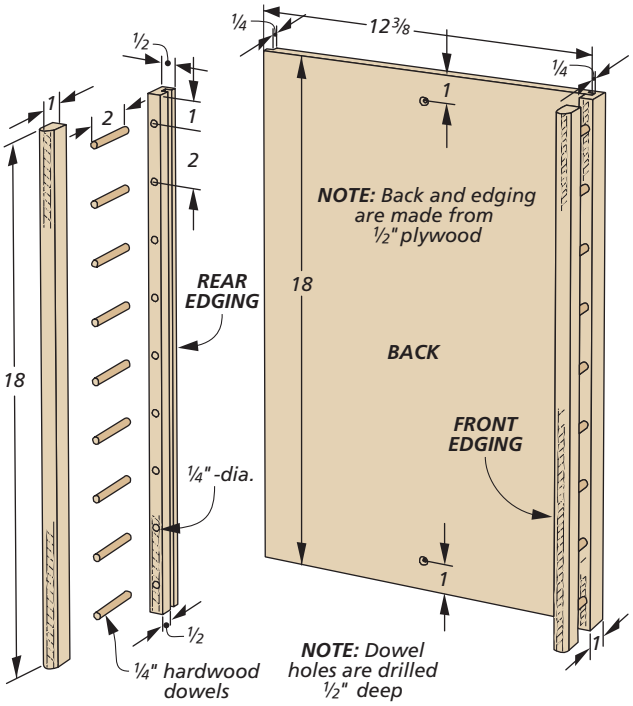

▲ The guides on the drawer are a basic wood runner with one slight difference. The pivoting hardwood block falls down into the gap in the lower case guides (right photo) to keep the drawer from pulling all the way out.

Shop-Made Drawer Guides

While building a new workbench, I decided to make my own drawer guides. These guides lock the drawer in place so it can't fall out.

DRAWER RUNNER. The main runner extends from the front of the drawer to the back, stopping 2½" from the rear. The secret to these drawer guides is a swing block that pivots down into a gap in the guides when the drawer is opened. This swing block has an oversized hole to allow it to pivot on a screw behind the main runner. A small section of runner is then screwed behind the swing block to complete the runner, as shown in the left photo above.

CASE RUNNERS. The runners inside the case are made up of four pieces; upper and lower guides and a pair of stop blocks. The lower guide extends from the back of the case stopping short of the front. A gap is left for the swing block on the drawer side to drop into. The stop block is then screwed into place. The upper guide is attached in the same manner, with a gap being left to allow some clearance for the swing block to pivot (upper right photo). The drawer can then be inserted into the case.

REMOVING THE DRAWER. When you pull the drawer out, the swing block will drop into the gap in the lower guide and hold the drawer in place. In order to remove the drawer, I drilled a small hole through the drawer side into the swing block. With the drawer half way out, I can slip a small nail through the hole into the swing block, keeping it from dropping into the gap (upper left photo). This allows the drawer to be completely removed from the case.

Gerry Meereboer
Broek op Langedijk, Netherlands

DIGITAL WOODSMITH

SUBMIT TIPS ONLINE

If you have an original shop tip, we would like to hear from you! We'll consider publishing your tip in one or more of our publications. Jump online and go to:

SubmitWoodsmithTips.com

You'll be able to tell us all about your tip and upload your photos and drawings. You can also mail your tips to "Woodsmith Tips" at the editorial address shown on page 2. We will pay up to $200 if we publish your tip.

RECEIVE FREE ETIPS BY EMAIL

Now you can have the best time-saving secrets, solutions, and techniques sent directly to your email inbox. Just go to:

Woodsmith.com
and click on,
"Woodsmith eTips"

You'll receive one of our favorite tips by email each and every week.

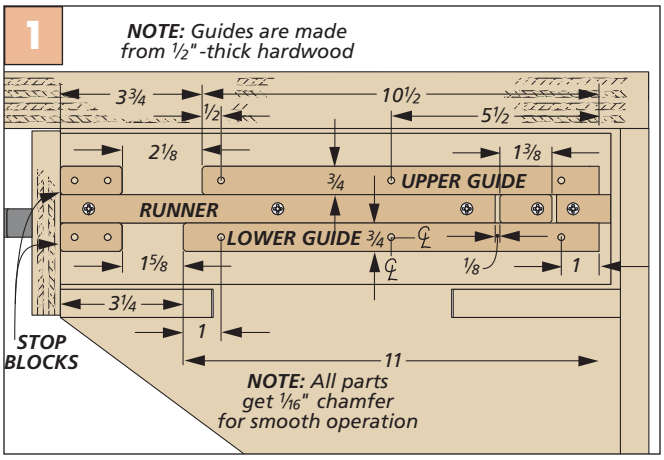

Drawer Closed. The swing block will pivot in line with the drawer runner and allow the drawer to close. The offset gap in the upper guide allows the corner of the block to pivot into place.

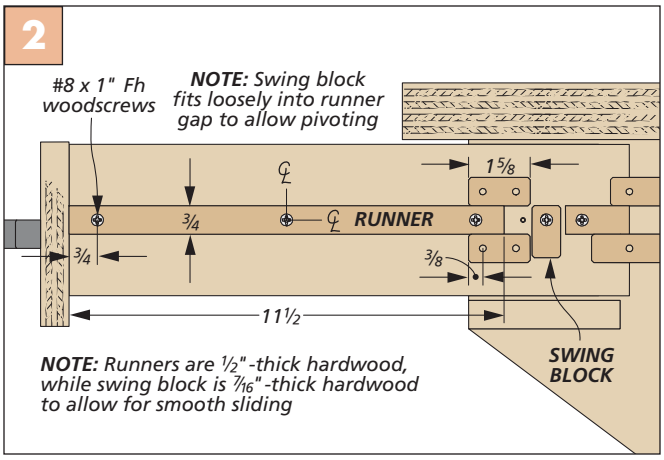

Drawer Opened. When the drawer is pulled open, the swing block will pivot down into the gap in the lower drawer guide. In this position, the drawer is locked into the case.

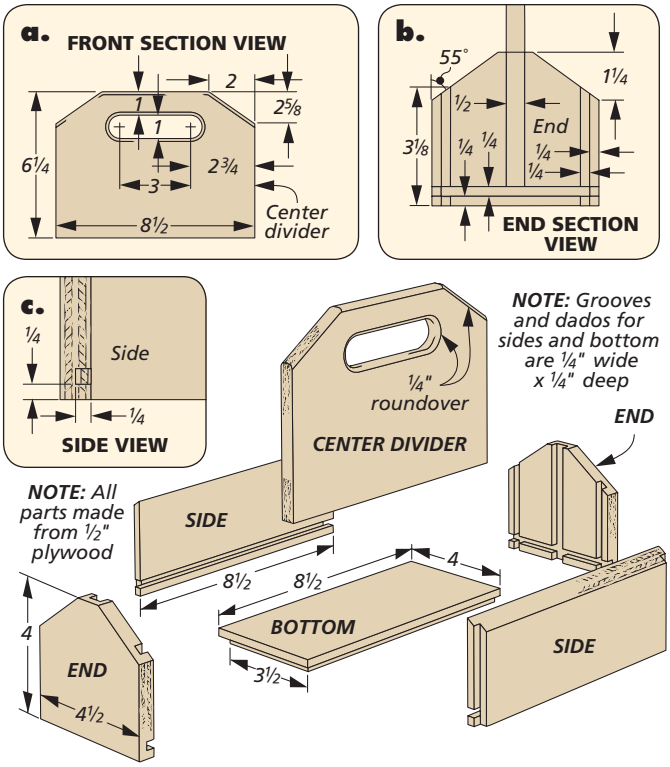

Setup Block Caddy

Over the years, I've found myself constantly setting up machines for the same measurements time and time again. So I made myself a set of setup blocks of the sizes that I commonly use. In addition to the standard setup blocks, I also cut frequently used profiles on hardwood blocks to more quickly set up the router table. Again, I routed multiple depths of each profile that I use often.

I use these setup blocks all over my shop, not only at my router table. In order to more easily carry them to wherever I'm working, I built this caddy to transport and store them. I can use them at one machine then carry the caddy to my next workstation. When not in use, I can hang the caddy on a hook on the wall or store it under my workbench. It really helps keep my blocks organized and convenient.

THE CADDY. The setup caddy is built out of plywood scraps that I had lying around the shop. The sides are joined to the end panels with tongue and dado joinery, and the bottom sits in a groove. The ends have dadoes to accept the center divider. I cut a handle in the center divider to make it easy to carry. I rounded all of the edges on the caddy using a small roundover bit.

Len Urban
Rancho Mirage, California

QUICK TIPS

Handscrew Stop Block. *Phil Huber* of *Urbandale, IA* has created a simple micro-adjustment for his handscrew when using it as a stop block. By adding a screw to one jaw (inset) and butting his work against it, Phil can fine-tune the adjustment with a turn of his screwdriver.

Sanding Paper Roll. When sanding moldings, *John Doyle* from *Ankeny, IA* was tired of trying to make a sanding block to match the inside coves. Instead, he reaches for a sandpaper roll that matches the cove. He can then wrap a small sheet of the correct grit around the roll as seen above.

Cabinet Door Helper Jig

I always seem to need an extra set of hands when I'm installing cabinet doors. As luck would have it, nobody ever seems to be available to help. Instead of waiting for someone, I decided to create a jig to hold the doors while I install them.

In order to attach a door, I first mount the hinges on the door and then capture the door inside the holders. I can then position the door and use the two knobs on the support column to move the door to the correct height and lock them in place, as shown at left. The jig has the added benefit of working as a board jack to help support long work pieces.

As you can see in the drawing below, the jig is easy to build with a few pieces of plywood. There are two adjustable holders that attach to the support column.

You can build the jig for any size of cabinet door. For heavier doors, you may want to modify the jig by making the feet wider for better support.

Rustin Albrecht
Lancaster, California

▲ The cabinet door jig is sized so that it can also be used at different workstations as a board jack to support long workpieces.

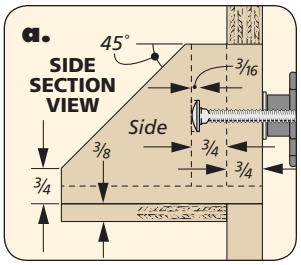

NOTE: Top and bottom holders are mirror images

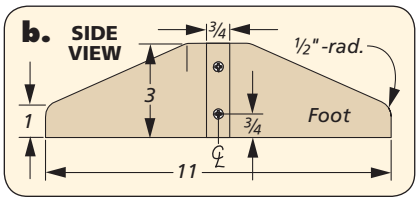

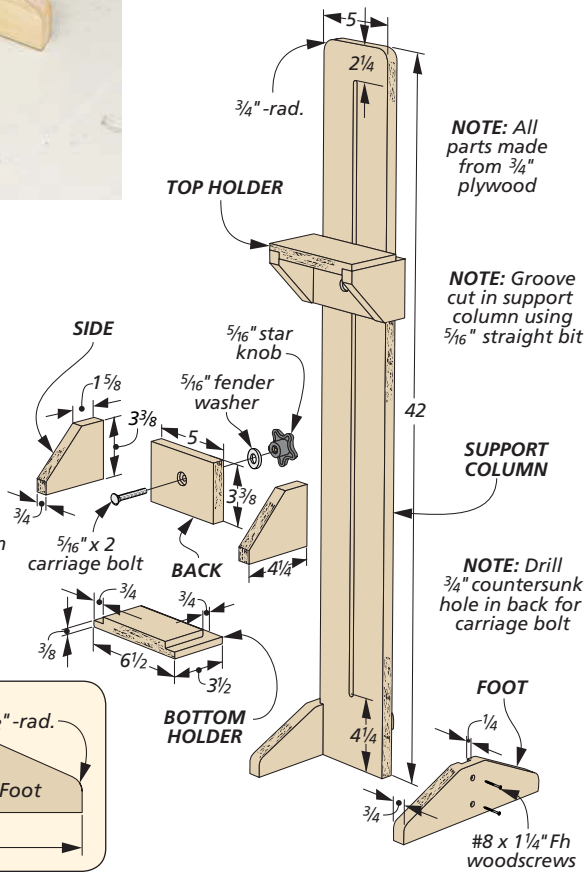

all about

Demystifying **Ebony**

▲ Various species of ebony have strikingly different looks that can range from black to near white.

Jet black and extremely dense, ebony has been prized by woodworkers for centuries. It's been used for everything from religious icons to piano keys. Keeping with tradition, the Greene and Greene-inspired bookcase on page 42 uses jet black Gaboon ebony for the signature plugs and cloud lift accents.

There are many types of ebony available, all from the genus *Diospyros*. The chart on the opposite page highlights different species of ebony, and some of the identifying features of each.

PRECIOUS AND PRICELESS. The first thing that jumps into my mind when I hear ebony is elegant and expensive, and the price of ebony is higher now than ever. But what is it about ebony that demands its price tag? It turns out the answer to that question is multi-faceted.

Perhaps the main reason that ebony is so expensive is how and where it grows. Almost all species in the *Diospyros* genus grow extremely slowly. Trees can take from 60 to 200 years to reach a mature harvest size. In addition to the rate at which the trees grow, their location also presents a challenge. Ebony generally grows in low-altitude tropical rainforests, where it is nearly impossible to get machinery. This means that when an ebony tree is ready to be harvested, it's generally manual labor that gets the tree out of the rainforest.

CITES. In addition to the physical limitations on ebony growth, there are also some legal regulations in place that have caused an increase in price. In 2011, CITES (the *Convention on International Trade in Endangered Species of Wild Fauna and Flora*) placed a majority of *Diospyros* on the Appendix II list. This CITES II regulation limits the export and import of those species between countries to help control and limit overharvesting.

Now, it may sound like the outlook for ebony is grim, but that is not necessarily the case. With CITES regulating the importing and exporting of ebony, measures are being taken to ensure that ebony will continue to be available in the future.

WORKABILITY. Now that we've talked about why ebony is so expensive and limited in supply, let's touch on how to work with it. Like a lot of exotic

Ebony Quick Facts

Common Name	Appearance	Common Uses
Gaboon ebony	Jet black with little to no brown	Piano keys, accent pieces, small ornamental pieces
Ceylon ebony	Jet black with occasional dark brown streaks	Inlays, small ornamental pieces, turned objects
Macassar ebony	Red-brown striped with darker brown or black	Turned objects, veneer, small ornamental pieces
Mun ebony	Dark reddish brown with black streaks	Inlay and veneer work
Persimmon (white) ebony	Very light pale yellow to white	Golf club heads, turned objects, small specialty items

▲ Wiping ebony down with acetone or denatured alcohol prior to gluing will ensure a good bond.

woods, working with ebony poses some interesting challenges. Ebony is a hard, dense wood, so having sharp tools is a necessity. When working with hand tools, keep a sharpening stone handy and use it often. If using power tools, make sure that blades and bits are in tip-top shape.

Ebony does tend to be brittle. My favorite analogy likens it to an *Oreo* cookie. Now, that may be a little extreme, but be aware that it does have a tendency to crumble. Take caution when working with small pieces that could snap, and it's a good idea to use a backer board to keep the workpiece from fracturing. All species of ebony listed in the table above turn very well, and ebony will take a highly polished shine when sanded to high grits.

GLUING. Like many exotic woods, ebony holds a high amount of resin and oils that can cause glues to not stick. To ensure a good glue bond, wipe down glue surfaces with a rag dampened with denatured alcohol or acetone to remove surface oils (upper right photo). The type of glue you use with ebony is also important. A polyurethane-type glue will stick well, as will two-part epoxy and hide glue. One thing to be cautious of with polyurethane glue is that it has a tendency to foam as it dries.

ALTERNATIVES. While we chose to use Gaboon ebony in our Greene and Greene bookcase, there are options available if you can't get it or want to save a little money. Many woods work well with a technique called ebonizing. Ebonizing is the process of dying, or chemically blackening the fibers of the wood to give the look of ebony. Some processes use ink to stain the wood, but for a how-to on one of our favorite ebonizing techniques, see the box below. W

Worth a Look: EBONIZING

ONLINE EXTRA video workshop

Doing a quick online search, you will find countless ebonizing techniques. My favorite however, uses simple ingredients to chemically alter the top layer of wood fiber.

For this technique, woods that have a naturally occurring high tannic content work best. Good choices are oak, walnut, and cherry.

▲ A solution of 1tsp. tannin powder and 1 cup warm water is brushed on and allowed to partially dry.

▲ Steel wool is dissolved in vinegar and brushed onto the still damp wood. The chemical reaction begins immediately.

Router table Rub Arms

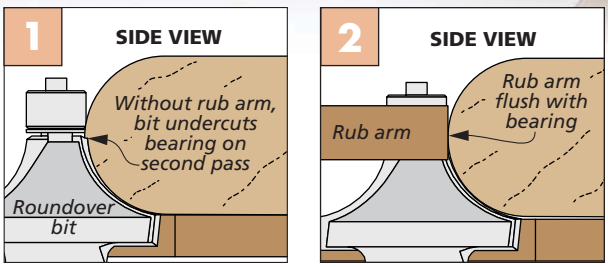

In the woodworking world of straight and square, curved parts add elegance to any project they're applied to. Although they take a little extra time to create, they're worth the effort in the long run.

The process of making curves usually goes along the lines of: lay out the curve, rough cut at the band saw, and sand smooth to the layout line. Then shaping the profile as the project calls for. This can be as simple as using a sanding block or a small round-over bit. Often, the profile being applied to the curved part is larger and more complex than just easing an edge. Many times you can rout gentle convex curves using the fence without having any problems. In other instances, all you have to do is remove the fence and guide the workpiece along the router bit bearing. But if the curve is too tight, (or it's an inside curve, as is shown in the upper drawing on the next page) that's when a rub arm comes in to play.

◄ Here are three examples of rub arms. All of these are designed to be clamped to the router fence.

A rub arm is a shop-made accessory clamped to your router table fence that creates a bearing surface for the curved surface of the workpiece to follow. As you see in the photo to the left, there are lots of options when it comes to making a rub arm. Each of these designs meet a specific challenge that makes routing curved parts a lot easier. The How-to box on the next page shows the basics of making a rub arm.

ROUNDOVERS. The first rub arm example is shown in the photo above. The goal is to make a perfect roundover on a ¾"-thick workpiece. Routing one side of the piece works just fine. But when you flip the board over, it

becomes clear that there's a problem. The first pass has removed the surface that the bearing needs to ride against. The result is that the second pass will leave a shoulder (Figure 1). To solve the problem, I made the rub arm you see in the main photo on the previous page. When you position the rub arm as shown in Figure 2, it becomes an extension of the bearing and will guide the center of the workpiece the proper distance from the bit.

The hardboard tongue has a notch slightly larger than the diameter of the router bit bearing. Once this rub arm is mounted to the fence and aligned to the bit, as the drawing on the previous page shows, you can make roundovers without the shoulder.

SHALLOW GROOVES. Another example of where a rub arm can come in handy is when making a shallow groove for a drawer bottom in a curved drawer front. In this case, the rub arm comes to the aid of a slot cutting bit. The slot cutter on hand is set up to cut ½"-deep grooves, but ¼"-deep grooves are what's called for. Normally what's done here is simply changing out the bearing to reduce the depth of the cut. If that's not possible, you can make a rub arm that acts as the larger bearing you need.

This rub arm has a clearance hole to fit over the bearing. The distance from the edge of the bearing to the front of the rub arm reduces the depth of cut to make a ¼"-deep groove, as detail 'a' in the top drawing shows. After you've assembled the rub arm, set the bit to the proper height and install the rub arm over it. Make a test cut before committing to the finished project parts.

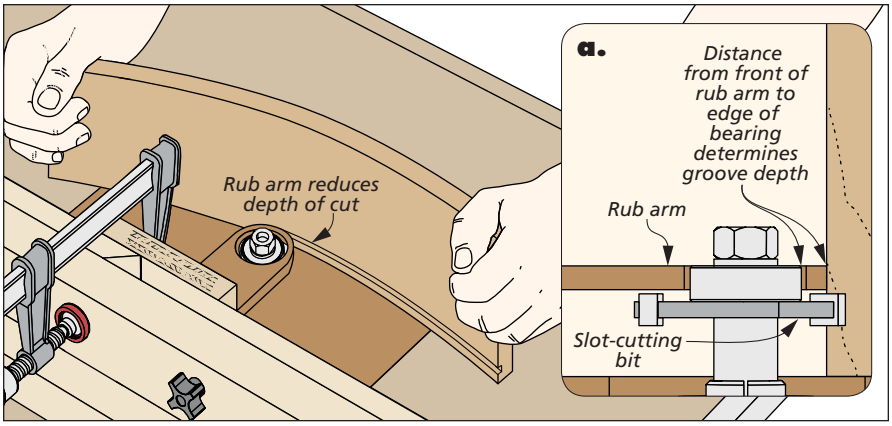

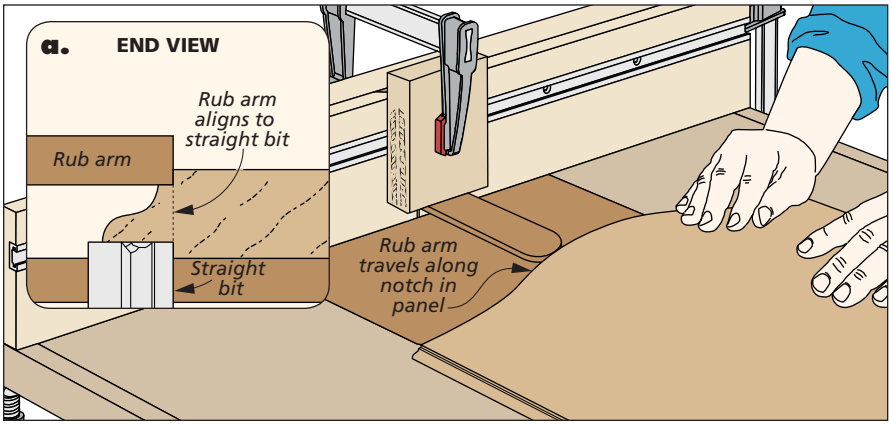

CURVED RABBETS. Routing a rabbet in a curved workpiece has its obstacles, as well. As the lower drawing shows, a rub arm is the answer to the problem again. Like the previous example, the rub arm becomes the bearing point, but in a slightly different manner. It works in tandem with a straight bit as shown in detail 'a' of the lower drawing.

The rub arm used here is the same that's shown in the box to the left. The easiest way to set up this rub arm is to align the tongue to the notch in the finished profile on the panel, as shown in detail 'a'. Then set the location of the fence before raising the bit to the needed height. After that, it's just a matter of guiding the workpiece along that notch to create the rabbet. By the way, you can rout the straight sides of the panel as well with this rub arm.

I'm sure that the examples shown here are sparking all sorts of ideas. However you choose to employ a rub arm, you'll find this jig a handy asset when making clean contours on curved projects.

How-To: MAKE A RUB ARM

The three rub arms shown here all start with the same two pieces. They're made by attaching a hardboard tongue to a plywood clamp block (the width of the tongue will vary, depending on the application). After tailoring the end of each tongue in the manner called for, I fastened them squarely to the clamp block with two woodscrews.

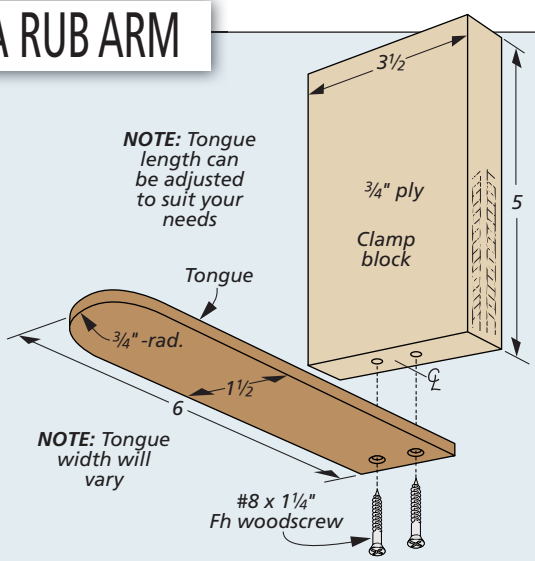

great gear

handling Sheet Goods

Working with large sheet goods by yourself can be as frustrating as it is back breaking. Materials like plywood and MDF are not only heavy, their awkward size makes them difficult to gain a solid grasp. Fortunately, there are a number of options specifically designed to help move these cumbersome sheets around. And while you'll still need to use a little muscle, these items facilitate the use of proper ergonomics. A couple of options not only aid in moving the materials, they'll also morph into infeed support at the table saw. This means you'll never have to bear the full weight again. Your back will thank you the next day.

▲ The *Gorilla Gripper* general purpose model is available for $49.95 from several online retailers.

GORILLA GRIPPER. With a design that's been refined over the last decade, the *Gorilla Gripper* (the general purpose model is shown in the inset photo above) is one of the more compact of the panel movers featured here. It consists of two aluminum plates that are placed over the edge of the sheet good. As you lift the sheet, a fulcrum-type lever pinches the material, locking it in its grip. The design of the *Gorilla Gripper* encourages proper "lifting with the legs," as shown in the main photo above.

While the *Gorilla Gripper* is perfect for moving sheet goods out of a truck or around the shop, its small size means

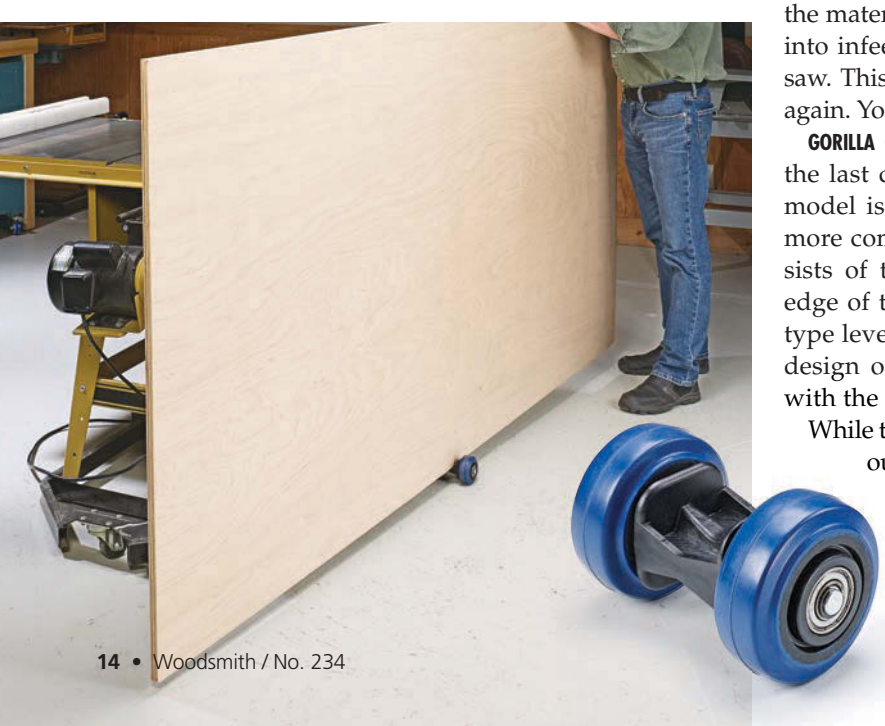

◄ At $24.99, the *FastCap Speed Skate* is an economical choice for moving sheet goods around on a smooth shop floor.

Go right from the truck (left photo) into the shop (right photo) with the *Material Mate Panel Cart & Shop Stand* from *Rockler.*

you can even take it to the home center. This makes the solo-loading of material onto a cart much easier. And for the budget-minded, the makers of the *Gorilla Gripper* recently introduced a nylon polymer model called the *Advantage* that clocks in at $29.95. Check Sources on page 67 for information on all of the products shown in this article.

SPEED SKATE DOLLIE. For those woodworkers who are only concerned with moving sheet goods around on a smooth shop floor, the *Speed Skate Dollie* by *FastCap* might be the answer (left photos at bottom of previous page).

This skateboard-looking device is simple to use. Just lift one end of your panel and slide the *Speed Skate* underneath. Position it near the end for long straight runs, or in the middle for turn-on-a-dime manueverability.

MATERIAL MATE. On the other end of the size spectrum, *Rockler* recently introduced the *Material Mate Panel Cart & Shop Stand*. This do-it-all cart can be wheeled right to your truck for unloading sheet goods (upper left photo). Engage the locking flip stops and the top of the cart can be rotated to a vertical position for easily transporting materials right into the shop, as shown in the upper right photo. It's designed to fit through a door opening as narrow as 30".

Once in the shop, the *Material Mate* also serves as infeed support at the table saw (right photo). And if that weren't enough, when not being used for moving around sheet goods, a shop-made top can be added for use as a portable work stand. At $249.95, the *Material Mate* may not be for everyone. But if you need to move large panels frequently, it's a solid choice.

For a more middle-of-the-road option, check out the box below. Whichever material mover you decide on, you're sure to reduce the physical strain from this arduous task. W

▲ Flip the *Material Mate* back to its horizontal position and you have ready-made infeed support at the table saw.

Worth a Look: PORTAMATE

The *PM-1800 Panel Carrier* made by *PortaMate* offers a nice compromise for around $95. This no frills panel mover looks vaguely similar to a standard two-wheel dolly, but with a pair of inline wheels and a swing-arm sheet goods carrier on one side.

The *PM-1800* allows you to roll your sheet around (far right photo) just like the previous two options. The rear support pivots out to act like a kickstand. You can then rotate the swing arm and panel to a horizontal position which allows you to slide the sheet right onto the table saw (middle photo).

▲ The *PortaMate PM-1800* panel carrier offers a less expensive option compared to the *Material Mate*, yet still shoulders the full weight of moving sheet goods around the shop.

woodworking technique

a quick & easy way to

Build Drawers

When it comes to building drawers for a project, I often turn to tongue and dado joinery. It strikes a good balance between strength and efficient construction.

FAST & EFFICIENT. For me, the appeal of tongue and dado joinery is the streamlined process — just two steps are necessary. Dadoes cut in the drawer sides accept a tongue formed on each end of the drawer front (and back). It's a lot like a mortise and tenon joint; the dado is similar to the mortise and the tongue acts like the tenon.

Once you have the setup dialed in for each step, you can quickly work through a stack of drawer parts. In this article, I'm showing the joinery work at the table saw, but you can just as easily use a straight bit in the router table.

DADO FIRST. The photo above shows the first step in the process, cutting a dado in the drawer sides. The location and dimensions of the dado influence the overall strength of the joint. The goal

▲ Start with the blade low and work up to a snug-fitting tongue in a series of passes, raising the blade between each pass. Recess the dado blade in an auxiliary rip fence to dial in the width of cut.

▲ How you cut the drawer bottom groove depends on the thickness of the bottom material. A dado blade works for stock that measures 1/4" or thicker. Use a standard blade for thinner material.

▲ The short-grain section ahead of the dado is the weak point of the construction. On light-duty drawers, the dado (and tongue) can be sized to half the thickness of the drawer front and back.

▲ By reducing the width of the dado to 1/8", the short grain section gets a little larger — and stronger. In both cases, the depth of the dado is no more than half the thickness of the drawer side.

you're aiming for is a joint where the end of the drawer side is perfectly flush with the outer face of the drawer front. For this to happen, the distance of the inner edge of the dado to the end of the drawer side should match the thickness of the drawer front.

Since the dado is close to the end of the drawer side, the material ahead of the dado is what resists the force placed on the joint. This short-grain section can snap under too much stress.

You can see how this plays out in the examples above that are made from 1/2"-thick stock. For drawers that won't carry a lot of weight, a 1/4"-wide dado works fine, as shown in the upper left photo. The material ahead of the dado is strong enough to do the job.

However, as the load increases, I reduce the size of the dado (upper right photo). It seems backwards, but going from a 1/4"-wide dado down to a 1/8"-wide dado increases the material ahead of the joint by 50 percent. A narrower dado requires a smaller tongue. However, the glue surface area remains the same.

The other dimension of the dado is the depth. My rule of thumb is to cut it no more than half the thickness of the drawer side (1/4" in this case).

THE TONGUE. The dado tells you what you need to know about the tongue that fits inside. The lower left photo on the previous page shows the setup. What you're doing is cutting a rabbet.

It's a good idea to use test pieces to dial in the blade height and width before cutting your actual project parts. The tongue formed by cutting the rabbet should slip into the dado with moderate hand pressure, with the shoulder seating firmly against the drawer side.

A GROOVE FOR THE BOTTOM. Even though the corner joints are taken care of, don't grab the glue bottle just yet. You still need to cut a groove for the drawer bottom. Size it to closely match the thickness of the bottom (lower right photo on the previous page).

After cutting the bottom to size, you can assemble the drawer. From there, take a look at the box below. It offers two approaches to tackling the appearance of the drawer front. What you end up with is a drawer with the good looks to match its strength. W

How-To: CHOOSE FROM TWO FALSE FRONT OPTIONS

Both the end grain of the sides as well as the drawer bottom groove are exposed in a drawer assembled with tongue and dado joinery. There are a couple of ways to dress up the appearance.

The near left photo shows the simplest solution. A false front is attached with screws. The false front can be positioned to create even gaps.

A second option is to glue a 1/8" to 1/4"-thick veneer to the front. Once it's trimmed flush, it becomes part of the drawer. The veneer can be made to match the primary project material or you can use a constrasting wood species.

▲ An overhanging false front is ideal for concealing metal drawer slides or creating an overlay drawer.

▲ You can glue a piece of thin stock to the drawer front to create an inset drawer. The veneer also reinforces the front joints.

Weekend Project

lathe turned Salt & Pepper Set

Contrasting woods and a simple, yet elegant, design make this project as enjoyable to build as it is practical to use.

When I hear the term pepper mill, the image that pops up in my mind is that of a waiter holding a baseball bat-sized mill over my salad as he vigorously grinds out pepper and tells me to say "when."

The salt and pepper mills in this project are a bit more discrete. Each one is sized to fit comfortably in your palm. And instead of a two-handed rotation action, the mechanisms in these mills work by simply pressing a plunger with your thumb (see photo below). In fact, the only turning you'll have to do with these mills is at the lathe, when it comes to shaping the bodies of the mills. It's a good opportunity to dust off that mini-lathe sitting in the corner of the shop and put it to use.

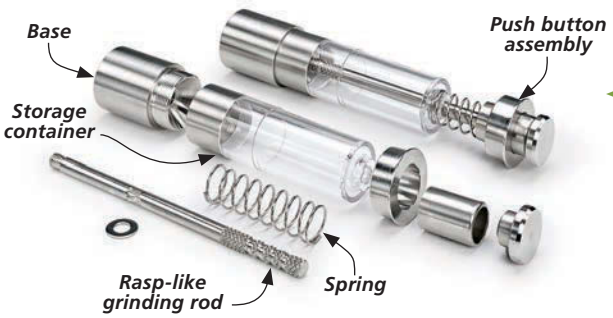

◄ The salt and pepper mills use a high-quality, stainless-steel grinder mechanism.

START WITH THE MILLS

There are essentially two parts to this project — the salt and pepper mills and the stand that holds them. I chose to make the mills first. The bodies of the mills start out as 2x2 turning blanks. I chose a dark wood (walnut) for the pepper mill and a lighter wood (maple) for the salt mill. But if you enjoy playing practical jokes on your dinner guests, you can reverse that order.

The length of the blanks is dependent upon the grinder mechanism hardware.

(The mechanism I used calls for blanks that are $3\frac{13}{16}$" long.)

With your blanks in hand, the next step is to bore out a hole for the grinder mechanism. In order to get the proper fit, you'll need a 25mm Forstner bit. And because you'll be drilling through the entire length of the blank, it helps to have a Forstner bit extension.

As you can see in Figure 1 in the How-To box below, I drilled the hole at the drill press, using a stop block and fence to position the blank. Don't worry about getting the hole perfectly centered on the blank at this point. You'll take care of that shortly, when you begin turning the profile.

JAM CHUCKS. After the hole is drilled, the next order of business is to turn the profile of the body. The key here is to make sure the hole ends up concentric with the profile. To do this, I turned a pair of plugs, or jam chucks to fit in the ends of the hole so that I could mount the blank between centers on the lathe. The second and third drawings in the box below will give you an idea of what I'm talking about.

To prevent the blank from slipping, the plugs should be a snug, friction fit in the ends of the hole. After turning the plugs and fitting them to the blank, you can mount the blank on the lathe using a spur center in the headstock and a live center in the tailstock. Make sure that the live center is pressed tightly against the plug to hold everything in place.

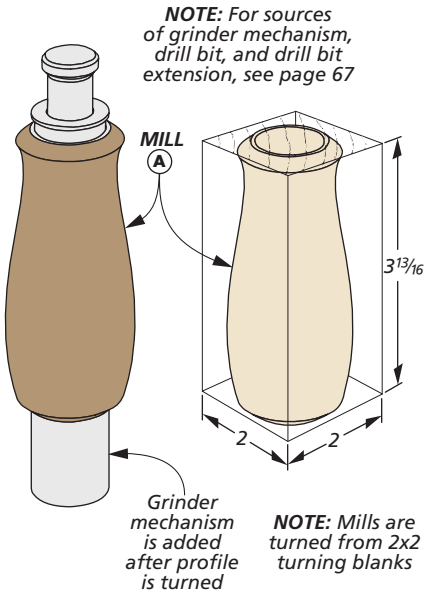

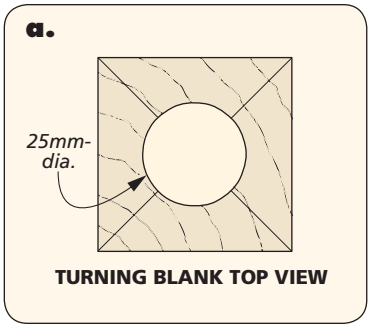

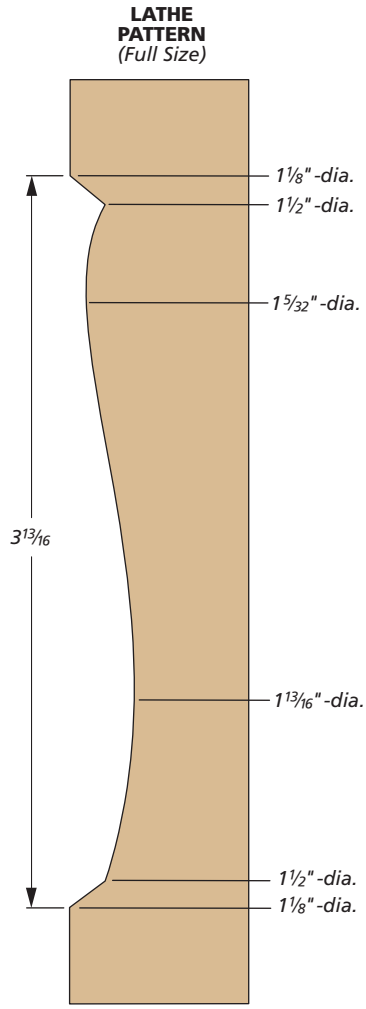

TEMPLATE. The actual profile of the mill body isn't too critical. But I wanted to make sure that both mills ended up identical (or close to it). So I made a hardboard template of the profile.

You can use the pattern in the drawing above to make the template. Once that's done, you're ready to start turning the blank to shape. The next page will walk you through that process.

How-To: PREPARE MILL BLANK

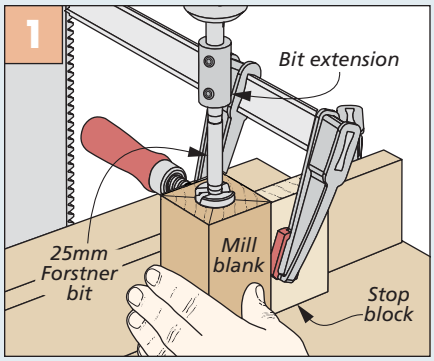

Drill Hole. Using a stop block to hold it steady, drill a 25mm-dia. hole all the way through the length of the blank.

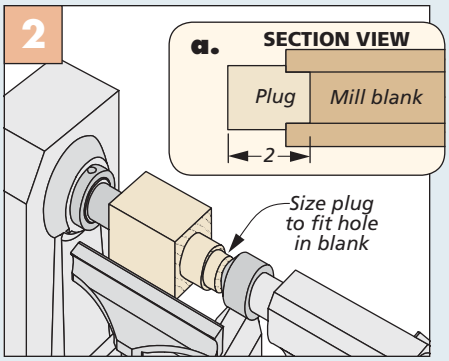

Jam Chuck. From a piece of scrap wood, turn a pair of plugs, or jam chucks, to fit snugly in the ends of the mill blank.

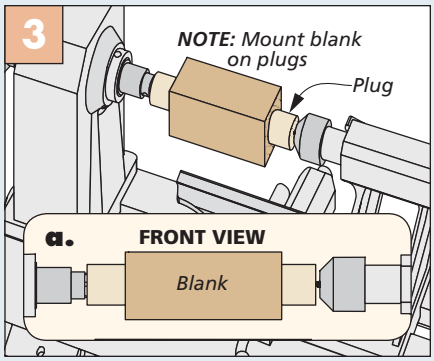

Mount Blank. With the plugs inserted into the holes, mount the blank between centers on the lathe.

Shaping the **SET**

With the blank mounted on the lathe, now the fun part can begin — turning the body to shape. The profile I used is simple enough that you don't have to be an expert turner to create it. I started by simply turning the square blank into a cylinder, using a roughing gouge.

After marking out the high and low areas on the blank, I used a round-nose scraper to shape the bulk of the profile. A parting tool can be used to create the chamfers at each end. The How-To box below explains how it's done.

After sanding the surface smooth, I applied a finish to the mill bodies while they were still mounted on the lathe. I chose a liquid woodturner's finish that's simply applied with a rag and then buffed on the lathe. (Refer to Sources on page 67 for details on the finish used.)

Once that's done, you can install the grinder mechanisms. These are epoxied into place. (Detailed instructions for installing the mechanism are available online from the manufacturer.)

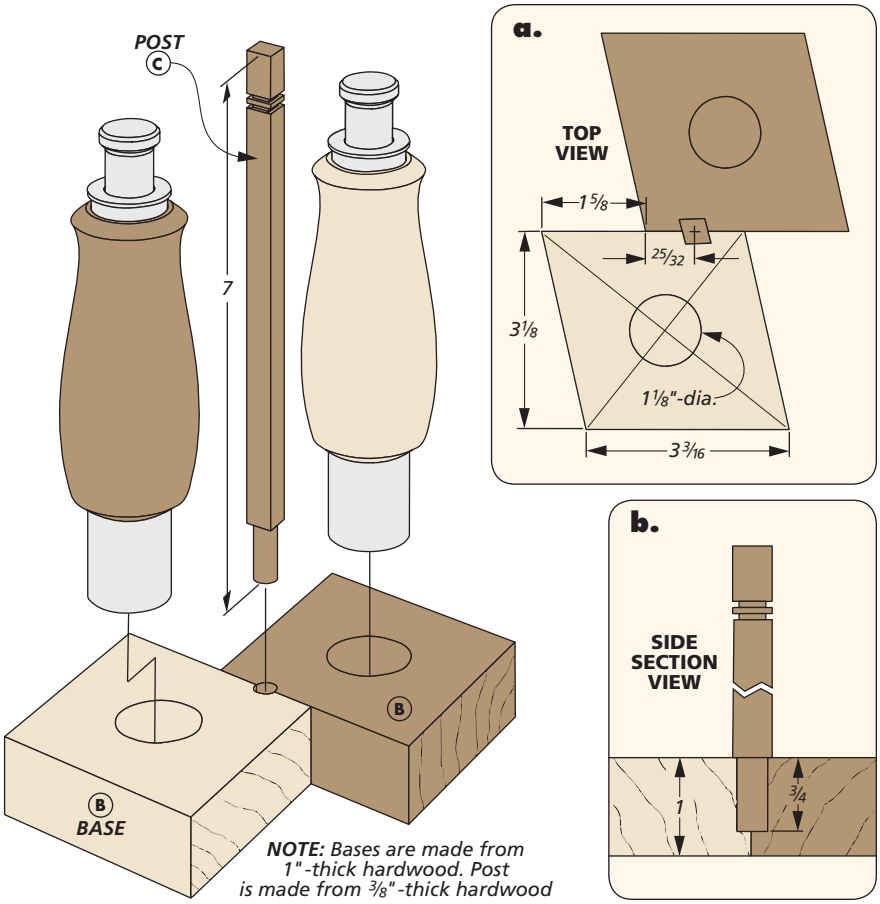

ADD A STAND

With the actual mills complete, all that remains is to make a stand to hold them. I decided to continue the theme of contrasting woods in the stand as well. It's made up of a pair of bases that are glued together, with a simple post that serves as a handle.

BASES. The bases that make up the stand are parallelograms in shape. To cut these to size, I mitered one end of a blank and then simply cut the base to length. Figure 1 in the box on the next page shows how this is done.

To hold the salt and pepper mills, I drilled a hole in the center of each base. The holes are sized to hold the mills, but they don't pass all the way through the bases. Figure 2 has the details.

At this point, you can glue the two bases together. As you can see in detail 'a' above, the bases are offset. Once the glue is dry, you'll need to drill a small hole for the post that will be added next.

How-To: CREATE THE PROFILE

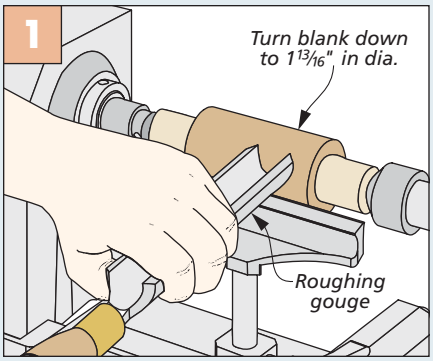

Rough Out Blank. Use a roughing gouge to knock off the corners of the blank and turn it into a cylinder.

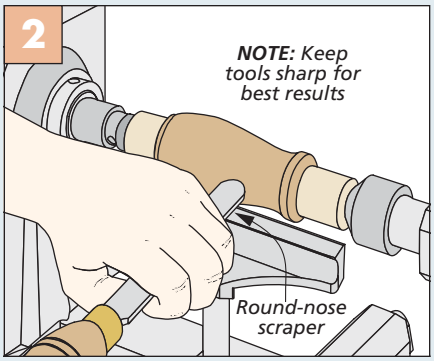

Shape Curves. A round-nose scraper can be used to create the undulating curves of the profile.

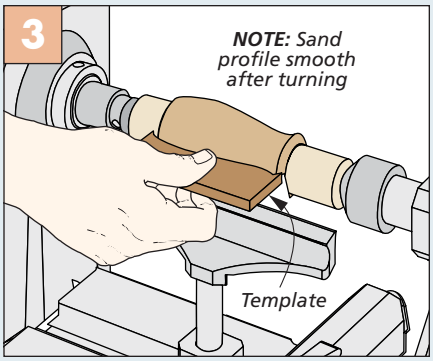

Complete Profile. Use the template you created to gauge your progress as you complete the profile of the blank.

How-To: MAKE THE STAND

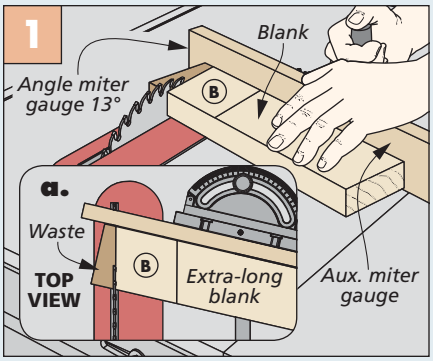

Cut Bases to Length. Miter the end of an extra-long blank at 13°, then simply cut the base to length.

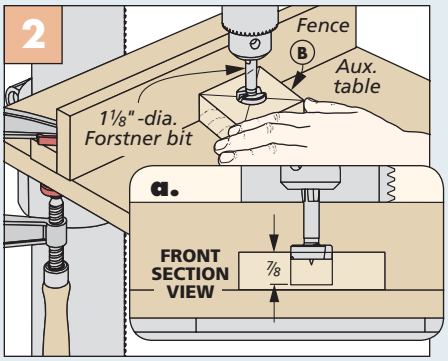

Drill Hole. Drill a slightly oversize hole in the center of each base to hold the salt and pepper mills.

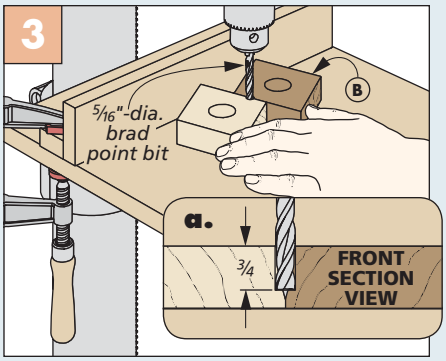

Hole for Post. After gluing the two bases together, drill a smaller hole for the tenon of the post.

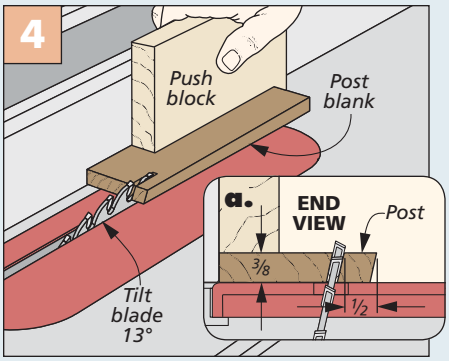

Cut Post Blank. With your saw blade tilted, bevel the edge of a wide blank and then rip the post free.

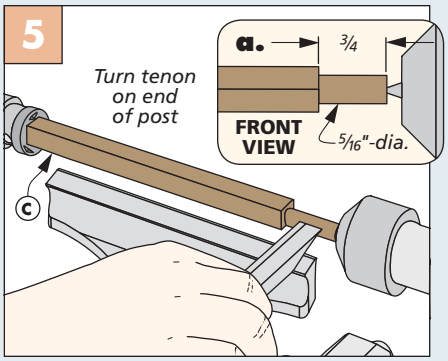

Add a Tenon. Mount the post in your lathe to turn a tenon on one end to fit the hole in the stand.

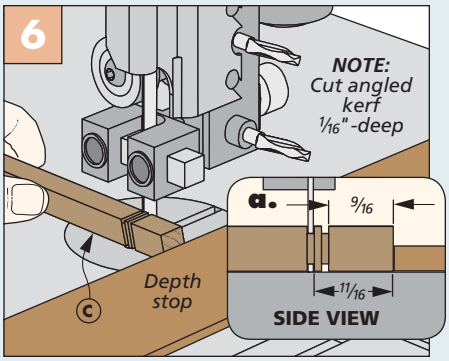

Decorative Kerfs. Working carefully at the band saw, cut a double band of kerfs near the end of the post.

This hole is centered right on the joint-line of the two blocks (Figure 3).

POST. In terms of appearance, the slender post is somewhat dainty. And because of its small size, making it is a little challenging. Like the bases of the stand, the post is also a parallelogram in shape. In order to bevel the edges of the post safely, I cut it from a wide blank, as shown in Figure 4 above.

After cutting the post to size, it's back to the lathe one more time to turn a round tenon on one end to fit in the hole you drilled in the base of the stand.

Materials & Supplies

A	Mill Blanks (2)	2 x 2 - 3 13/16
B	Bases (2)	1 x 3⅛ - 3⅞
C	Post (1)	⅜ x ½ - 7
•	(2) Pump-n-Grind Pepper Mill Kits	

As you can see in Figure 5, a live center in the tailstock helps to support the narrow workpiece as you turn the tenon. You'll want to sneak up on the final diameter of the tenon to make sure it's a good fit in the hole in the stand.

KERFS. To make the post easier to grip, and to add a decorative touch, I cut some narrow kerfs around the post, near the top. I did this at the band saw, using a thin fence as a stop to control the position and depth of the cuts. Figure 6 details the setup that I used. Keep in mind that these kerfs are pretty shallow, so you're basically just kissing the blade with the workpiece.

After gluing the post into the hole in the base, you can apply a finish to the stand. Now all that's left is to fill the mills with peppercorns and crystal salt, place them in the stand, and set it on the table for your next meal. W

▲ The salt and pepper mills are each operated with a simple, one-handed pump action.

Shop Project

lighted & adjustable Drawing Table

Sketch out your next project on a smooth glass surface that tilts to a comfortable angle. Two drawers corral all your drawing supplies.

Call me a little old-fashioned, but when it comes to spending time in the shop, I'm decidedly retro. With a few exceptions, my tools and machines are mostly vintage finds that still work great. And when it comes to creating the plans for my next project, I reach for paper and pencil. My drawings won't win any awards, but in a short time I can sketch out just what I need.

What's needed is a place to do the drawing that's a little more comfortable than a workbench. The solution is this drawing table. It's a portable workcenter that features a tilting drawing surface that adjusts to almost any angle thanks to a pair of support brackets.

LED lights beneath the drawing surface create an ideal way to trace patterns or modify existing drawings. This nod to technology keeps the table from getting too heavy or generating a lot of heat.

Below the adjustable top, a plywood base contains a pair of storage drawers to organize your drafting supplies and keep them dust free — a big plus in the shop. The base is wider than the table so you have a flat spot to keep important items close at hand, as shown in the inset photo above. (An eraser and a coffee cup come to mind.)

Building the drawing table provides a good exercise in basic woodworking joinery. And in a short time, you'll have created a great place to work out the details for your next masterpiece.

Construction Overview / OVERALL DIMENSIONS: 30"W x 4¼"H x 18 11/16"D

NOTE: For hardware sources, turn to page 67

▲ A strip of LED lights inside the table illuminates the drawing surface for tracing plans and sketches.

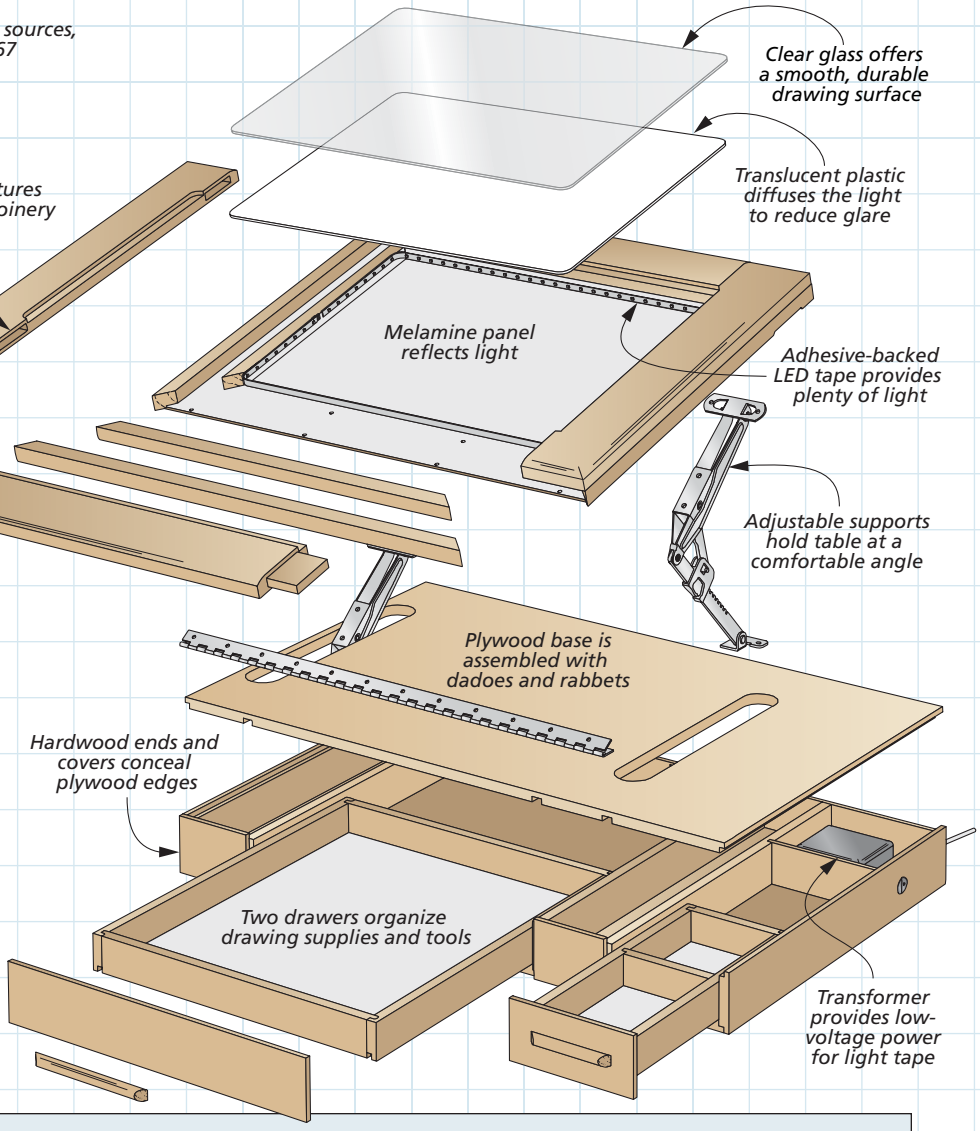

Materials, Supplies & Cutting Diagram

A	Top/Bottom (2)	½ ply. - 18½ x 29½
B	Dividers (3)	½ ply. - 2¼ x 18¼
C	Ends (2)	½ x 2¾ - 18½
D	Small Divider (1)	¼ x 2 - 6
E	Back (1)	¼ x 2¼ - 29½
F	Left Cover (1)	¼ x 2¾ - 3 15/16
G	Right Cover (1)	¼ x 2¾ - 3 11/16
H	Lrg. Dwr. Sides (2)	½ x 1 11/16 - 18
I	Lrg. Dwr. Front/Back (2)	½ x 1 11/16 - 15
J	Lrg. Dwr. Btm. (1)	⅛ mel. - 15⅛ x 17½
K	Sm. Dwr. Sides (2)	½ x 1 11/16 - 12¾
L	Sm. Dwr. Frt./Back (2)	½ x 1 11/16 - 4⅞
M	Sm. Dwr. Btm. (1)	⅛ mel. - 4⅞ x 12¼
N	Large False Front (1)	¼ x 2¾ - 16⅛
O	Small False Front (1)	¼ x 2¾ - 6¼
P	Handles	½-dia. x 12 rgh.
Q	Stiles (2)	¾ x 3 3/16 - 18¾
R	Rails (2)	¾ x 3 3/16 - 20⅝
S	Inner Frame	⅝ x ¾ - 67 rgh.
T	Outer Frame	1 1/16 x ¾ - 86 rgh.
U	Table Bottom (1)	⅛ mel. - 18 1/16 x 23 5/16

- (22) #6 x ½" Fh Woodscrews
- (1) 1½" x 23½" Cont. Hinge w/screws
- (2) Tabletop Supports w/screws
- (1) Rocker Switch, Wire, and Clips
- (1) 20W Power Supply
- (1) 7' LED Light tape
- (4) #6 x ½" Rh Woodscrews
- (1) ⅛"- Glass 13⅜" x 18⅝"
- (1) ⅛"- Trans. Acrylic 13½" x 18½"

¼" x 6" - 36" Hard Maple (1.5 Sq. Ft.)

½" x 7" - 48" Hard Maple (2.3 Sq. Ft.)

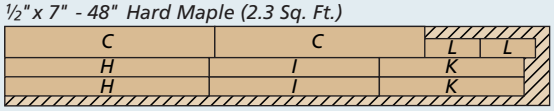

***ALSO NEEDED:** 24" x 48" sheet of ⅛" melamine-covered hardboard. 24" x 48" sheet of ½" maple plywood*

¾" x 5" - 96" Hard Maple (3.3 Bd. Ft.)

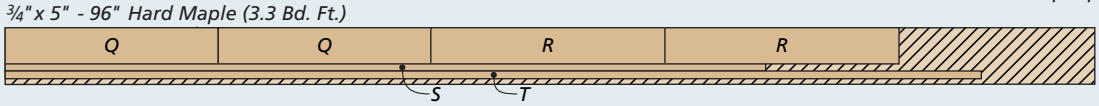

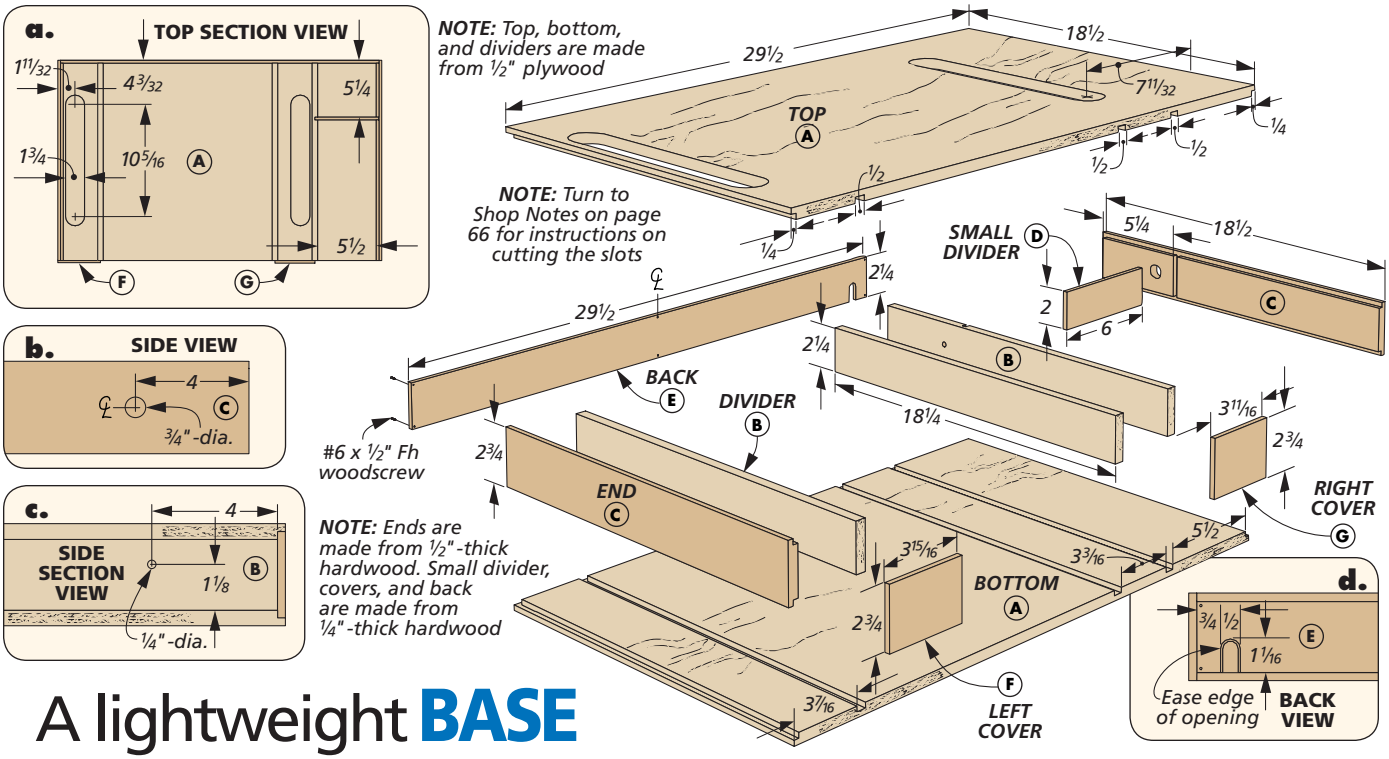

A lightweight **BASE**

There are two main components of the drawing table: a base and an adjustable top. The starting point is the base, as it serves as the foundation for the top. In addition to supporting the top, the base houses the drawers and the power supply for the lights inside the top.

LIGHT & STURDY. To help keep the weight down so the table can be moved around easily, I primarily used ½" plywood, as shown in the drawing above.

The box below highlights the joinery you need to cut in the top and bottom pieces. It begins with cutting three dadoes to accept internal plywood dividers, as shown in Figure 1.

Next up are some rabbets. A rabbet at each end holds a hardwood end that enclose the sides (Figure 2 below). Another rabbet is cut along the rear edge to capture the back, as in Figure 3.

Before moving on, the top requires a little more work. A pair of slots are cut in the top to create clearance for the table supports that allow the table to tilt. The dimensions are shown in detail 'a,' while the process I used to make the slots can be found in Shop Notes on page 66.

DIVIDERS & ENDS. For the most part, the dividers are simply cut to size from plywood. The right divider has a dado to accept a small divider. This creates a compartment at the back of the base to house the power supply, as you can see in detail 'a.' The right divider also has a hole to allow the wire from the light to pass through (detail 'c').

The ends come next. These two pieces have rabbets on the upper and lower

How-To: CUT DADO & RABBET JOINTS

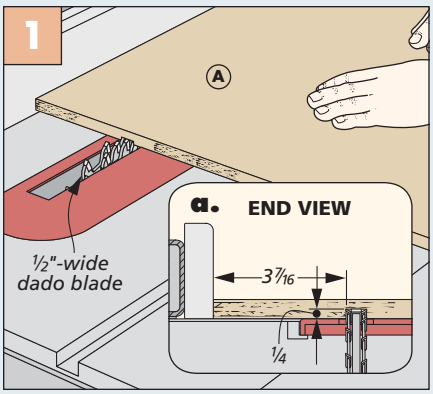

Dadoes. Set up a dado blade that matches the thickness of the plywood to cut the dadoes in the top and bottom.

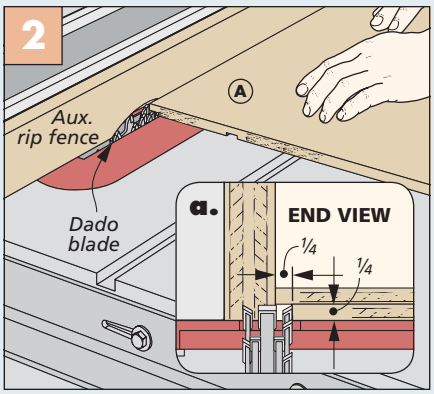

End Rabbets. Recess the dado blade in an auxiliary rip fence to set the width for the end rabbets.

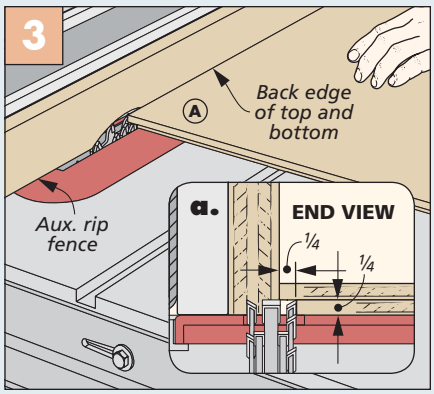

Back Rabbet. You'll use the same setup to cut a rabbet on the top and bottom to house the back piece.

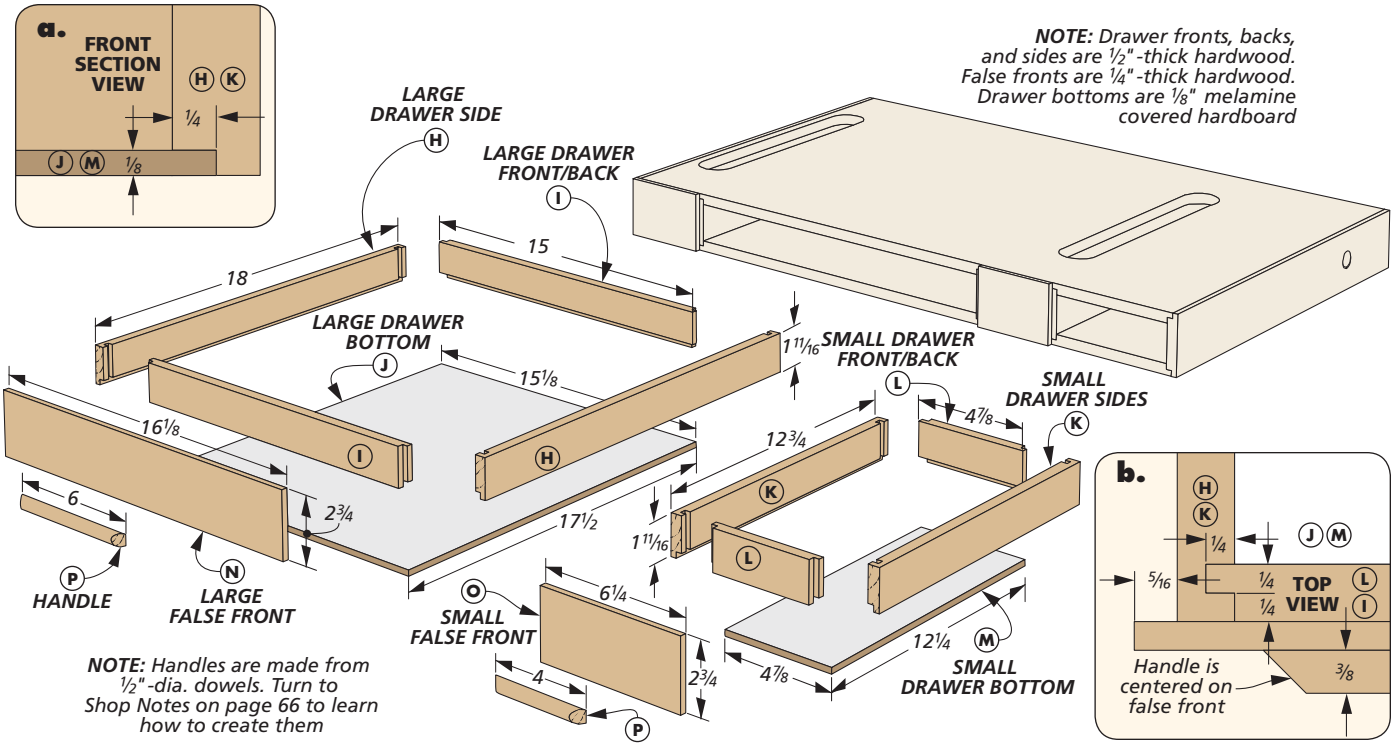

edges, as well as the back. I made these from hardwood to cover the exposed plywood edges of the top and bottom.

The right-hand end has a hole for the switch to activate the light. On the inside face, there's a dado that aligns with the dado in the divider for the small divider.

ASSEMBLY. At this point, I dry assembled the dividers and ends to the bottom to determine the final length of the small divider. Once it's cut to size, you can grab the glue bottle and clamps to bring the pieces together for good.

COVERS & BACK. The plywood edges at the front of the base are concealed by a pair of covers and the false fronts of the drawers. I cut these pieces from a single, long blank. This way, the grain runs seamlessly across the front. It's a small detail, but really adds to the appearance.

The back can be cut to size from hardwood. It has a notch on one edge to allow the power cord to pass through. This is shown in detail 'd' on the previous page. The back is held in place by screws. But don't install it just yet.

TWO DRAWERS

The drawers shown in the drawing above complete the work on the base. While they have different sizes, the joinery is the same. The box at the bottom of the page covers the process of cutting the tongue and dado corner joints as well as the rabbet to hold the bottom.

Once you cut the bottoms to size, the drawers can be glued up. Then it's just a matter of adding the false fronts. I made pulls from dowels. Page 66 has the details on how they're made.

How-To: CUT THE DRAWER JOINERY

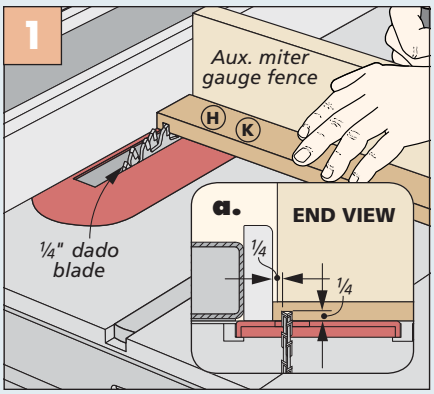

Dadoes. The distance from the end of the piece to the inside edge of the dado matches the thickness of the mating part.

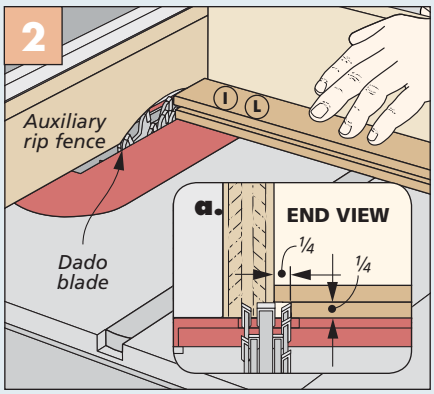

Tongues. Cut a rabbet to form a tongue on each end of all the drawer fronts and backs to fit the dado.

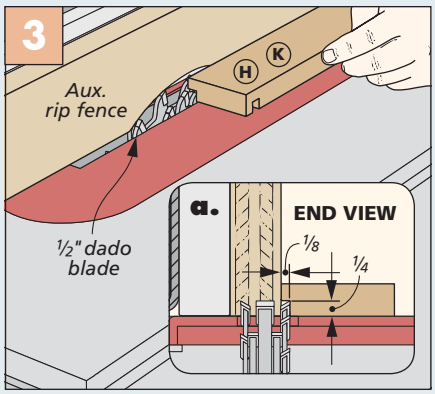

Rabbet for Bottom. The drawer bottom fits into a rabbet cut in the drawer front, back, and sides.

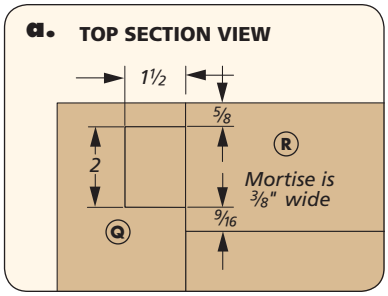

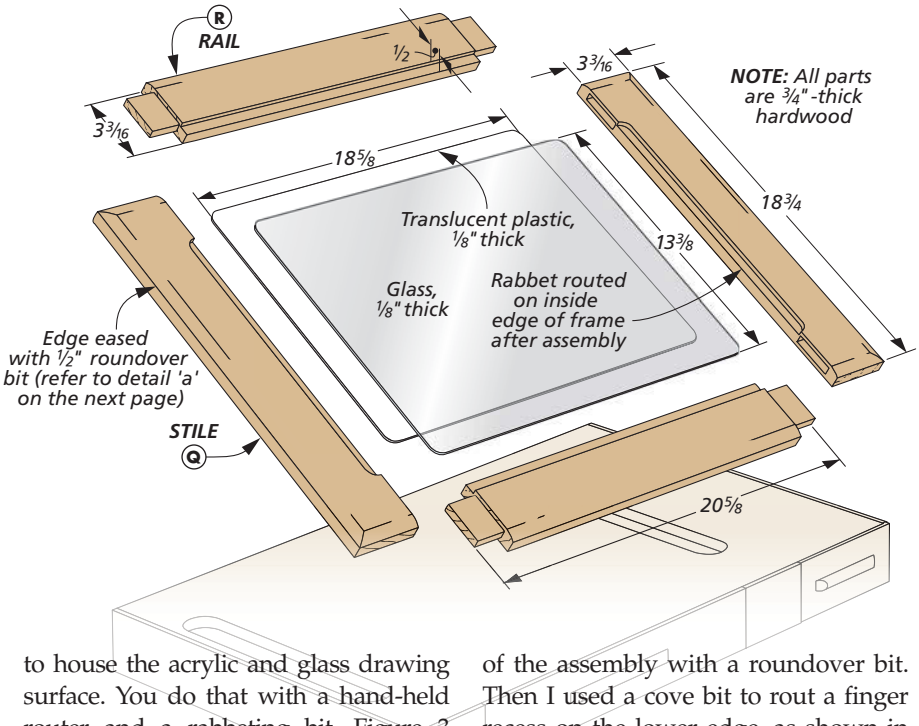

Adjustable TOP

Having completed the lower case of the drawing table means it's time to tackle the adjustable top. It's built up in two layers, as shown in the drawing at right and on the top of the next page.

MORTISE & TENON. The upper assembly consists of a pair of stiles and rails that cradle the worksurface (drawing at right). Mortise and tenon joinery connect the parts. Figures 1 and 2 in the box below show the steps for creating the joints. I prefer making the mortises, first. Then cut the tenons to fit. There's better access to the tenon for fine tuning the fit than there is on the inside of a deep, narrow mortise.

ASSEMBLY. When you're satisfied with the fit of the corner joints, you can glue the parts together. As you bring in the clamps, be sure to keep the assembly both square and flat.

POCKET. Once the clamps come off, there are a couple of further steps to take. The first is to form a pocket inside the frame to house the acrylic and glass drawing surface. You do that with a hand-held router and a rabbeting bit. Figure 3 below shows how it's done. The bearing on the rabbeting bit makes the width of the rabbet automatic. What you need to set is the depth of cut. Match the depth of cut to the thickness of both the acrylic and of the glass (about ¼").

The completed rabbet will have rounded corners. Cutting and sanding the acrylic to match the opening is a pretty simple task. The glass is another matter. So I took the assembly to a glass shop to have glass cut to fit the opening.

ROUNDOVER & RECESS. The next operation to perform is easing the outside edges of the assembly with a roundover bit. Then I used a cove bit to rout a finger recess on the lower edge, as shown in detail 'a' on the next page.

INNER & OUTER FRAMES

The drawing on the top of the next page highlights the remaining work on the top. You need to add a pair of narrow frames on the bottom of the upper assembly. These frames add depth so the light source isn't so close to the drawing surface that it would create uneven lighting. The right side piece has a hole drilled in it to allow the wire for the light to pass through. The inner frame is installed first flush with the inside edge

How-To: MAKE A MORTISE & TENON FRAME

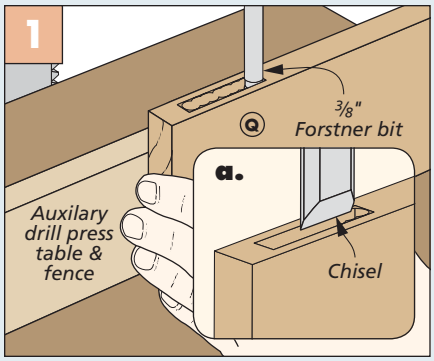

Drill the Mortise. Remove most of the waste by drilling overlapping holes. Then clean up the edges with a chisel.

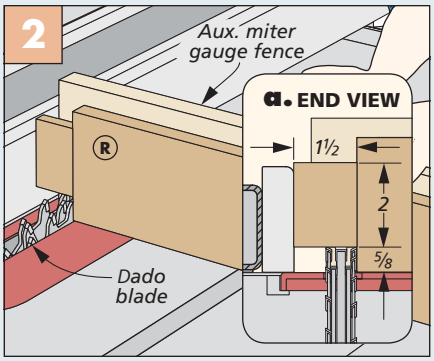

Cut the Tenons. Using the rip fence as an end stop, form the tenons with a dado blade in the table saw.

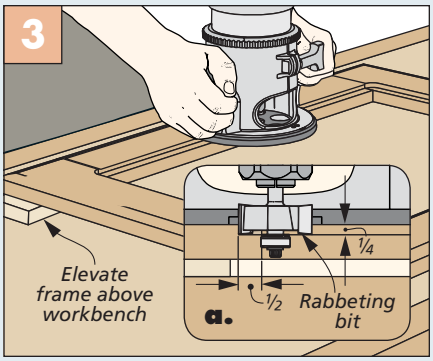

Rout a Rabbet. Move the router in a clockwise direction to rout a rabbet on the inside of the assembled frame.

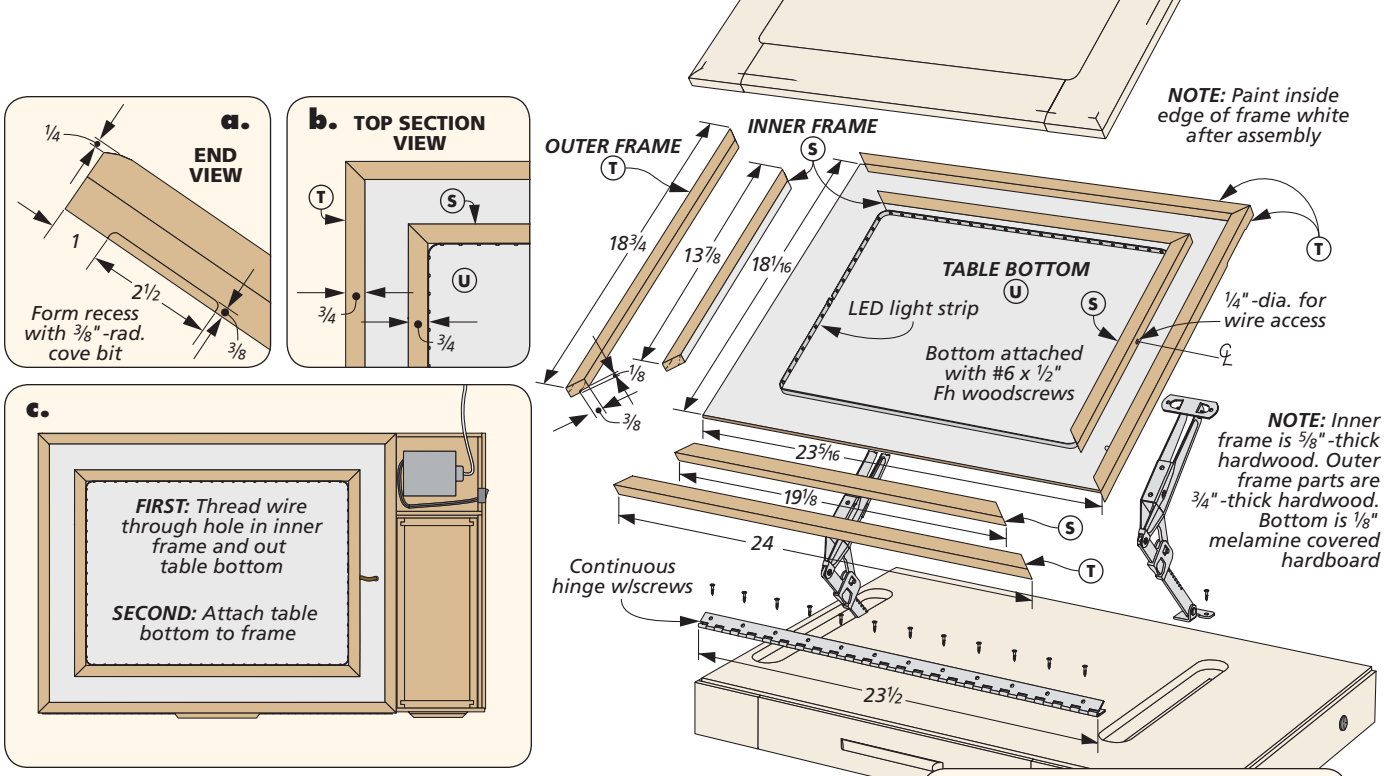

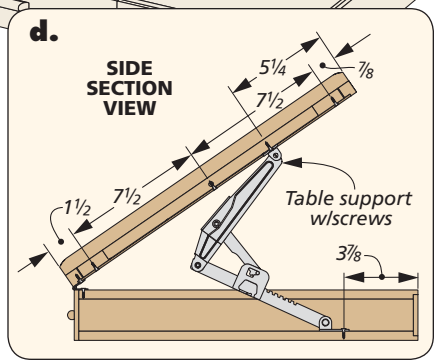

of the upper assembly. The corners are mitered (detail 'b' above). I painted the inside edge of the opening with white paint to create a more reflective surface.

OUTER FRAME. The outer frame is only slightly more involved. These pieces have a rabbet on the bottom face (Figure 1 below) to house the bottom panel. Like the inner frame, this frame is mitered and positioned flush with the outside of the upper assembly.

BOTTOM. At this point, you can cut the bottom panel to size. I used melamine-covered hardboard. The reflective melamine helps create even lighting.

Before attaching the bottom with screws, cut the adhesive-backed light strip to length and install it. Feed the wire through the inner frame and the bottom to run into the base and to the power supply (box at lower right).

The top mounts to the platform with a continuous hinge at the lower edge (main drawing). A pair of adjustable supports hold the top at a variety of angles, as in detail 'd.'

After applying a few coats of finish, the table is ready to load up with your drawing supplies. Then it's time to start sketching your next project. W

How-To: CREATE THE BOTTOM FRAMES

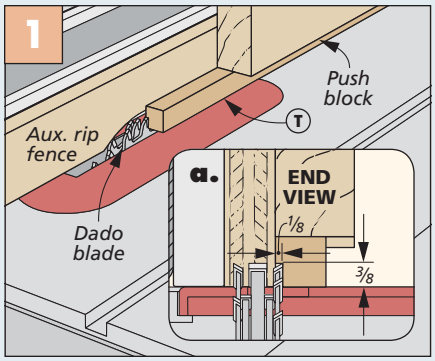

A Shallow Rabbet. The depth of the rabbet needs to match the thickness of the hardboard bottom material.

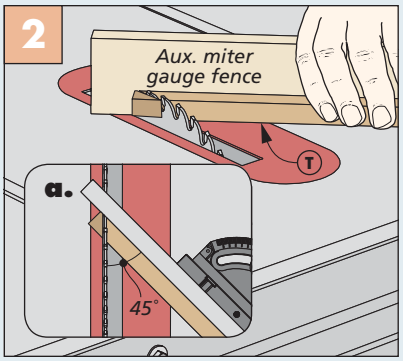

Miter the Ends. Both the inner and outer frame pieces are mitered at the corners, then glued in place.

How-To: FINAL WIRE

To complete the wiring, remove the back panel. Insert the switch wire and light wire into the connections on the power supply. The power supply tucks into the back compartment on the platform. It's a good idea to secure the power cord to provide strain relief.

Designer Project

arched-stretcher Sofa Table

This versatile table is a great addition to any space, casual or formal. As well as the faithful companion to your sofa, it can serve many ways.

Historically, a sofa table has been a quiet servant that waits dutifully in the wings of the room — behind the sofa. As you see in the photo above, this table is fully capable of fulfilling that duty, but you don't have to stop there. This handsome piece of furniture has more to offer.

The legs and arched stretcher are glued up from thick stock to give the base of the table a strong, massive look. Using thinner 5/4 material for the top balances the design. This all means it could serve as a streamlined replacement for a larger buffet in the dining room. Or take up residence in a hallway, entryway, or bathroom just as easily. It would also work well tucked under a wall-mounted TV.

All of these versatile options might suggest that you have a complex project that you're preparing to tackle, but that's not the case at all. As shown in the drawing on the next page, you're going to be working with some thick pieces of material, but the well-thought-out design has reduced the joinery to tried-and-true basics. Mortise and tenon joints for the legs and stretcher, plus, throw in a little tongue and groove on the breadboard ends of the top. To fasten the top to the base you'll use five large screws — it can't get much simpler than that.

Construction Overview / OVERALL DIMENSIONS: 52½"W x 30"H x 15"D

Hardwood top made from thinner stock is visually lighter than base

Mortise in breadboard end mates with tongue in top

Beveled breadboard ends lighten the top's profile

Once glued, pins hold ends in place

Top is held to base with screws through braces and center of stretcher

Beveled braces provide strong support for top

Arched stretcher opens up the look of the table

Arched stretcher is made of sections held together with splines

Notches in legs provide clearance for stretcher tenons

Stretcher tenon ties the stretcher to the legs

NOTE:
Finishing information is on page 67

Tapered pin holds stretcher tenon in place

Mortise and tenon joinery secures the legs to the feet

A pair of glued-up legs provide stability

Gracefully arched foot anchors table

▲ The beveled breadboard ends are a nice transition from the sturdy structure of the base.

▲ A large tenon and tapered pin secures the arched stretcher to the leg assemblies.

Heavy-duty
LEG ASSEMBLIES

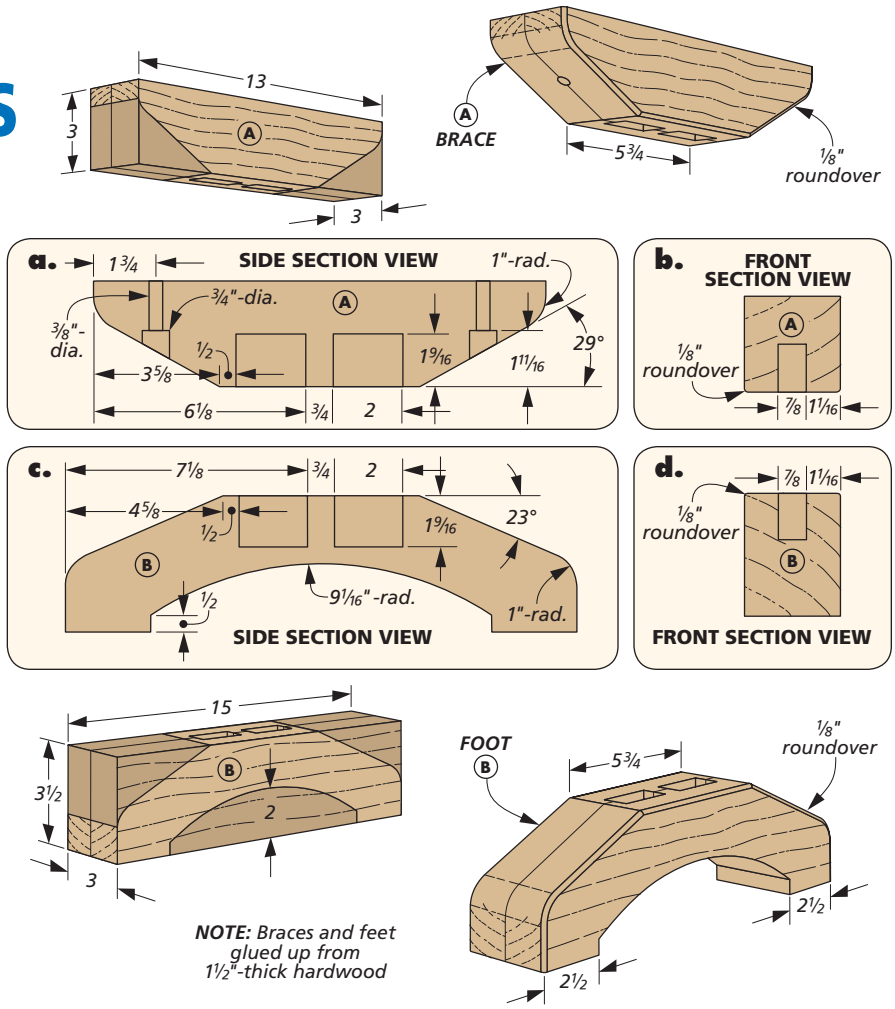

I started the project by focusing on the feet and the braces that support the tabletop. Both of these pieces begin as blanks glued up from 1½"-thick (8/4) stock. For stability, the feet are a little longer than the braces, and if you take a glance at the main drawing, you'll see that they're ½" wider, as well. This extra width provides room for the arch that I cut in the bottom of the feet. I'll get to that in a little while. First, I tackled making the mortises that tie these pieces to the legs which you'll make shortly.

MORTISE WORK. The mortises are centered in the width and length of the blanks for the feet and braces. These are some large mortises, so it's easiest to remove most of the material with a ⅞"-dia. Forstner bit (Figure 1). When drilling the holes, drill them slightly deeper than the length of the tenons. This will prevent the tenons from bottoming out in the mortise when installed. After clearing away the chips, complete the mortises by squaring up the walls and corners with a sharp chisel back at the bench.

You can now turn your attention to several other details. There are some mounting holes to drill in the braces, and angled profiles to cut on both pieces, then an arch to cut in the feet.

THE BRACES. Before shaping the profile of the brace, you need to drill the mounting holes for attaching the base to the top. These counterbored holes are drilled in both ends of the braces. Figure 2 gives the details needed to complete this. Then you can lay out the angles for the tapered ends. Remove the waste by cutting to the

How-To: CUT & SHAPE THE BRACES & FEET

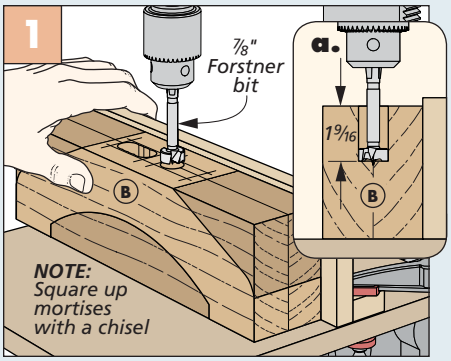

Mortises in Braces and Feet. After drilling holes with a Forstner bit, square up the mortises with a chisel.

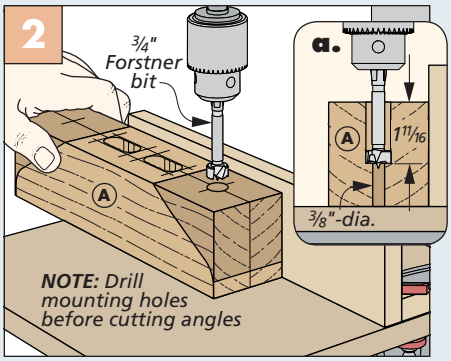

Mounting Holes in Braces. After drilling the counterbore to the proper depth, drill the pilot hole.

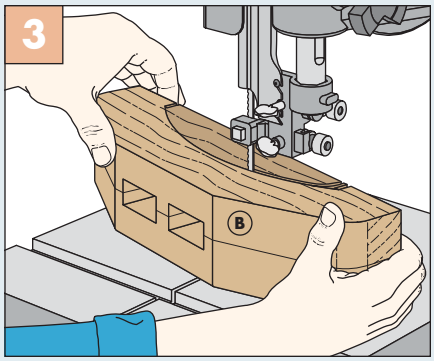

Cut the Arch. The angles on the feet and braces and the arch on the feet are cut at the band saw.

waste side of the line at the band saw. Then sand the profile smooth.

THE FEET. As I mentioned earlier, the feet are a ½" wider (taller) than the braces. This gives the feet a little more material to compensate for the arch on the bottom. Figure 3 on the previous page shows you how to cut these out. To finish the feet and the braces, ease the outer edges with an ⅛" roundover bit. The legs are the next order of business.

MAKE THE LEGS

Like the feet and braces, the legs are also glued up from two layers of material. But because I wanted the legs to be slightly thinner than the feet, I used 1¼"-thick material to glue up the blanks for the legs. As you can see in the main drawing, you'll need to notch the legs to accommodate the tenons of the arch that spans between them. But first, I went to work on the tenons on the ends of the legs.

TENON TIME. Start by laying out the tenon locations (and while you're at it, mark the notch location on the inside faces of the legs). Then head over to the table saw and make the cheek cuts (Figure 1). Now you can nibble away the rest of the material to create the tenon shoulders (Figure 2). The depth of the dado setup for the shoulders of the tenons matches what you need for the notch on the legs (Figure 3). So knock that off your list while you're at the table saw.

Bringing the leg assembly together is up next. With all the parts gathered on the bench, take a moment to consider your clamping strategy.

ASSEMBLE THE LEGS. The large, closely positioned mortises are certainly your ally when it comes to keeping the leg assembly square. But a dry run is in order. When you're comfortable with the fit, apply the glue and clamps in earnest. While those are drying, you can begin work on the stretcher.

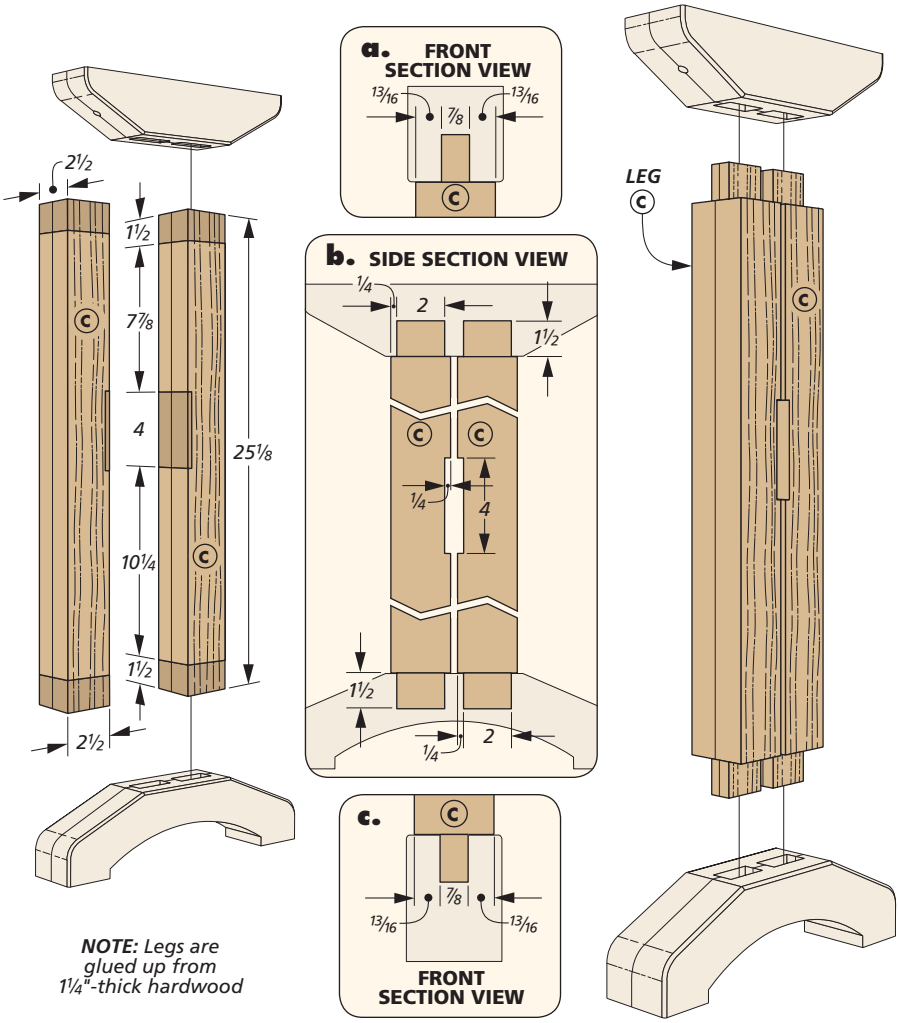

How-To: MAKE TENONS & NOTCHES IN THE LEGS

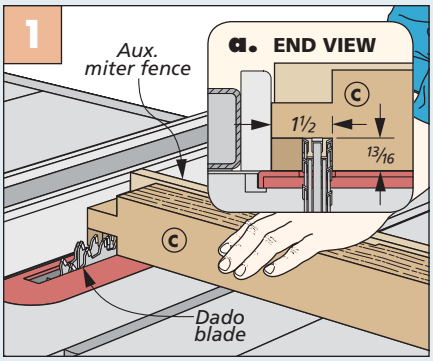

Cut the Cheeks First. Use an auxiliary miter fence to prevent any chipout while making the cheek cut.

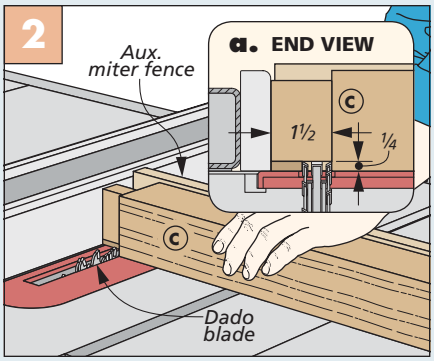

Shoulders Next. Lower the blade and rotate the leg to make the shoulder cuts on the short side of the tenon.

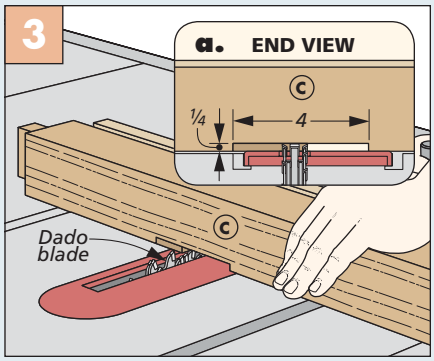

Notch the Legs. Remove the rip fence and use the miter gauge to make the notches for the stretcher tenon.

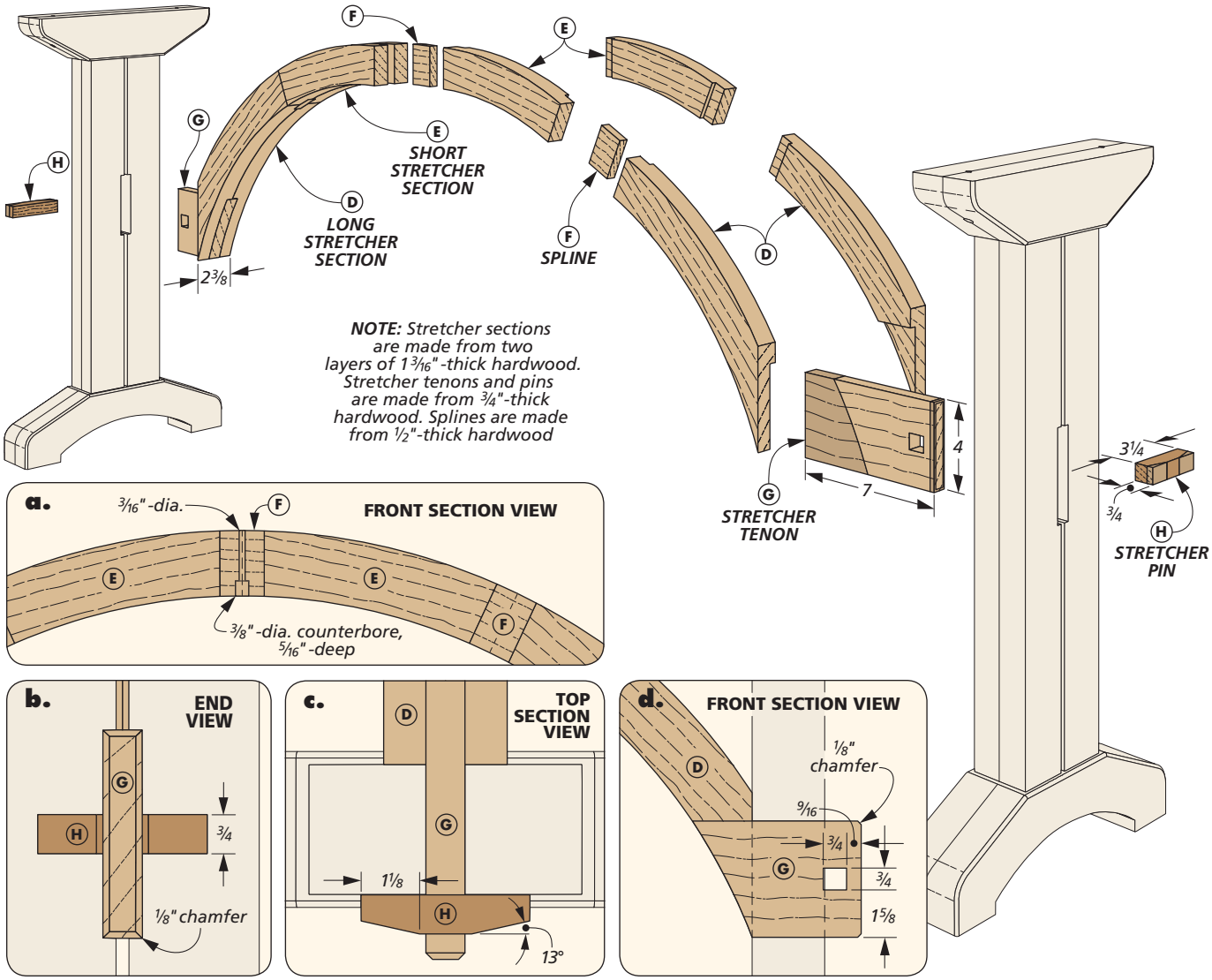

Adding the **ARCHED STRETCHER**

The arched stretcher serves the purpose of tying the legs together and supporting the tabletop. Like all of the previous parts, the stretcher is glued up from two layers of hardwood. It starts out as four oversized sections that have the ends mitered, as shown in the drawing at the top of the next page. You'll make a set of custom tenons to tie the stretcher to the legs.

MILL THE BLANKS. The miters on the ends of the four sections that make up the stretcher are all different. The drawing on the top of the next page shows you the details. To tie the sections together, I made a slot in the ends to hold a spline. Figure 1 on the next page shows how to do this. There is still a notch to make in the outer end of the long stretcher sections. This will house a tenon that you'll make later. As Figure 2 shows, this notch is best formed at the band saw.

SPLINES. As I mentioned earlier, the stretcher sections are held together with hardwood splines. For strength and stability, you'll want to orient the grain of the splines so it runs parallel with the grain in the stretcher sections. The drawing above shows what this looks like. The splines won't take long to make. Then you can work on gluing up the stretcher sections.

GLUE UP THE STRETCHER. As you gather all the parts at the workbench to assemble the stretcher, there's a few extra pieces you'll need — clamping cauls. To draw the stretcher together, glue temporary cauls (a dab of glue in the waste area of the blanks) on both sides of the ends of the stretcher blanks. Then you can clamp up the stretcher (on both sides) and set it aside to dry (Figure 3).

CUT THE CURVE. With the clamps off, gently pry the cauls from the arch. Since you glued them in a waste area, tear-out shouldn't be a problem. The drawing on the top of the next page gives you the measurements for the arch. Figure 4 has the details for shaping it. When you're done sanding the arch smooth, there's a quick detail to tend to. Figure 5 shows how I drilled

the mounting hole in the apex of the arch. Next up is making the stretcher tenons and pins.

STRETCHER TENON & PIN. The stretcher is tied to the legs with through tenons that fit in the openings created by the notches you cut into the legs earlier. They start out as blanks you'll custom fit before gluing them to the stretcher.

Once the tenons are glued into the stretcher, the stretcher is held in place between the legs with a pair of pins that fit in a square opening in the tenons (detail 'd' previous page). The tenon blank in the main drawing is straightforward enough, but to make the pins I used a sled. The details for it are in Shop Notes on page 65.

SHAPE THE TENON. The goal for shaping the tenon is to cut the end of the tenon to match the shape of the arch. With the legs spaced the proper distance apart, slide the stretcher tenon blanks, and its pin, in position through the notches in the legs. Now you're ready to drop the stretcher assembly in place over the tenons and trace the profile (Figure 6). Make this cut at the band saw to the waste side of your mark.

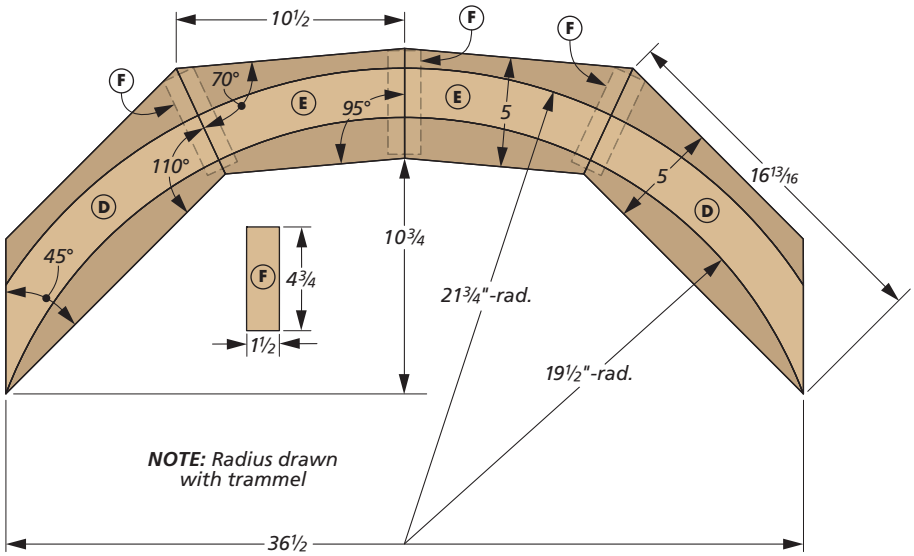

GLUE THE TENON TO THE STRETCHER. Before you put the assembly back together, glue and clamp the tenons to the arch. When the joint is dry, sand the curved end of the tenon flush to the arch.

How-To: SIZE, SHAPE, & ASSEMBLE ARCH PARTS

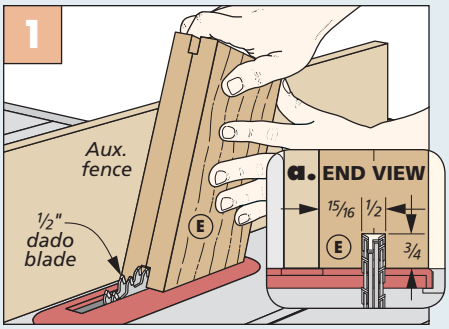

Cut Slots. Use a tall auxiliary fence on the table saw to support the stretcher sections as you cut the spline slots.

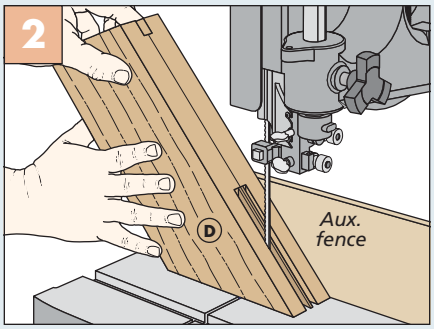

Notch for Tenon. Cut the shoulders of the notch, then nibble away the rest. Clean up the notch with a chisel.

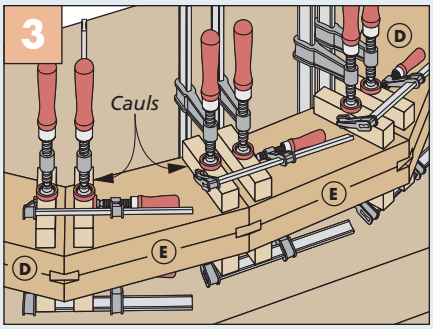

Clamp Sections. The clamping cauls make it easy to glue the stretcher sections together without gaps.

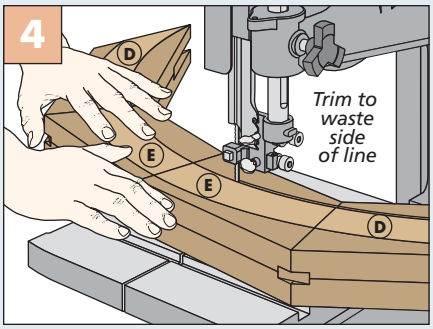

Cut Out Arch. Remove the waste parts of the stretcher at the band saw, then sand smooth to the layout line.

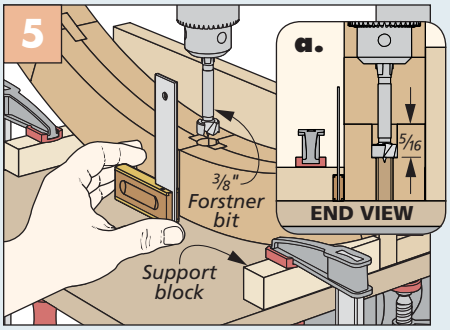

Drill Mounting Hole. Clamp support blocks to the drill press table, then drill the counterbore and pilot holes.

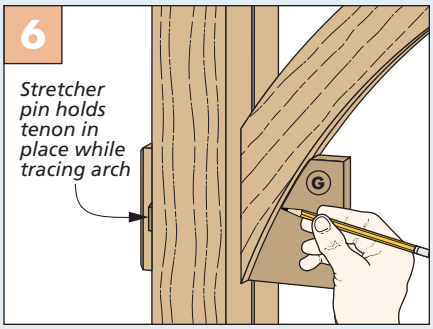

Trace Curve. Dry assemble the base to trace the profile of the stretcher onto the tenon, then cut it to shape.

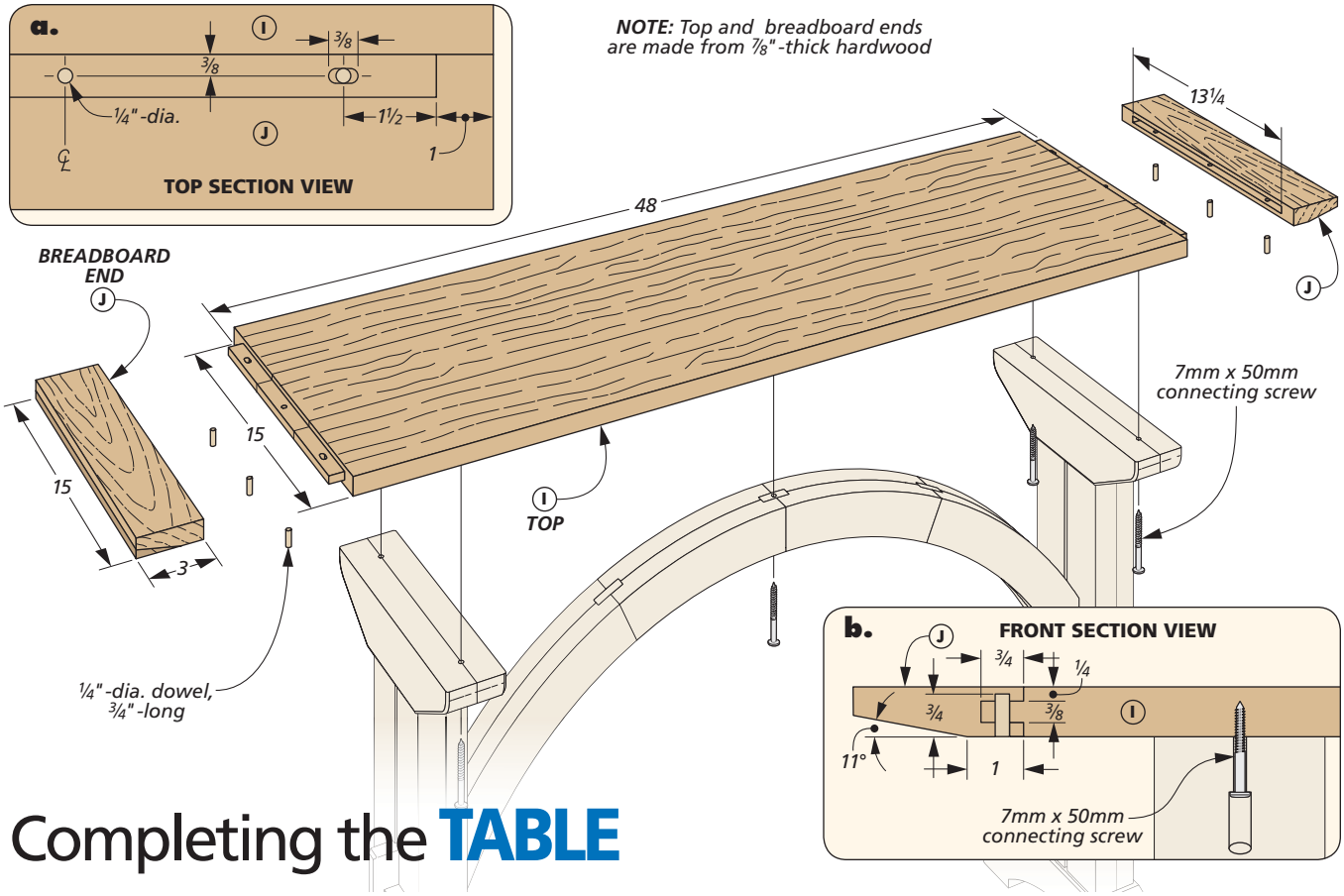

Completing the TABLE

With the leg assemblies complete and the stretcher installed, all that's left to do is make the top. To lighten the look of the top, I made it from 7/8"-thick hardwood. The beveled breadboard ends also add to this effect and give the top a formal flair. Gluing up an oversized blank for the body of the top was the first order of business.

SIZING THE TOP. The long and narrow top presents a bit of a challenge when it comes to trimming it to length. So instead of trying to use the table saw, I did the work at the bench.

The easiest way to cut the top to its final length is with a circular saw. Since both ends of the top are going to have a tongue milled on them, any minor chipping that happens isn't a concern. Just make sure your cut is square. When you've finished that, you can move on to making the tongue.

Again, due to the length of the top, it's best to use a handheld router and a straightedge to make the tongues. Figure 1 below gives you the information needed to pull this off.

How-To: CREATE THE TABLE TOP & BREADBOARD ENDS

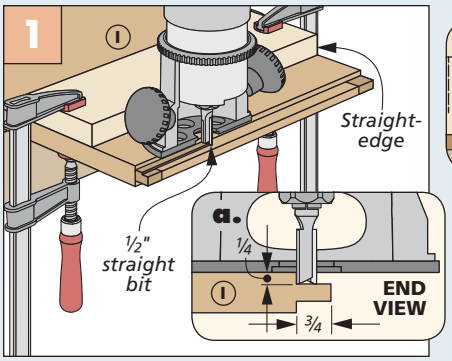

Tongue. Use a router and straightedge to create the tongue, then cut the shoulders with a handsaw.

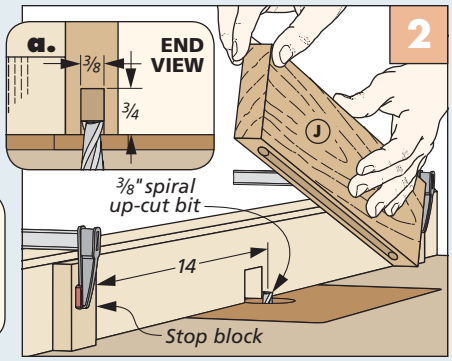

Rout the Mortise in Ends. Create the mortise in several passes by running the workpiece between the stop blocks.

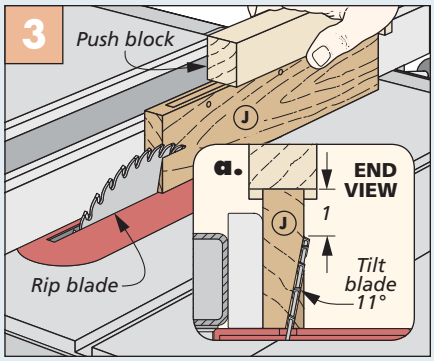

Bevel the Ends. To prevent burning, use a sharp blade and steady feed rate to cut the bevel on the workpiece.

Once the router is put away, you can create the shoulders on the tongue. I did this with a handsaw and chisel. That's all the prep needed for the top. You can turn your attention to the breadboard ends now.

BREADBOARD ENDS. After I sized the pieces for the breadboard ends, I drilled the holes on the undersides of the workpieces for the dowel pins that will hold them in place. As detail 'b' shows, these are not through holes, so I was mindful of how deep I was drilling them. Next is the slot that fits over the tongue in the top. As you can see in Figure 2 on the previous page, the mortise is created at the router table employing some stop blocks and a spiral up-cut bit.

THE BEVEL. There's one more task to perform on the breadboard ends, and that's cutting the wide bevel on the underside of the piece. Figure 3 on the previous page shows this. Tilting the blade on your table saw 11° is what's needed here. Go at a steady pace without stopping to avoid burning the wood. A little time with a sanding block will remove any blade marks.

There's a bit more work to do before attaching the ends. First, you need to drill the holes in the tongues for the dowels in the breadboard ends. Figure 1 above shows this. With the holes drilled, remove the ends for a moment and widen the outer holes like you see in Figure 2 above. This is needed to account for seasonal wood movement.

When you glue the breadboard ends on the top you'll make allowance for seasonal movement, as well. To do this, apply glue to just the center third of the tongue. And just enough glue on the dowels to hold the end in place. This lets the top move when it needs to.

FINISHING TIPS. To add a little contrast, I decided to stain the breadboard ends and the stretcher pins slightly darker than the rest of the table. I started out with a coat of sanding sealer over the entire table. Then I stained the breadboard ends (after masking them off) and the stretcher pins with a dark stain. When they were dry, I stained the rest of the table with a lighter stain, followed by two coats of lacquer.

ASSEMBLY. To bring the table together, you need to lay the top face down. Then center the upside-down base assembly on it. Now screw the base to the top. However you decide to use the table, there will be no regrets for the shop time you invested in building this beauty. W

How-To: INSTALL THE BREADBOARD ENDS

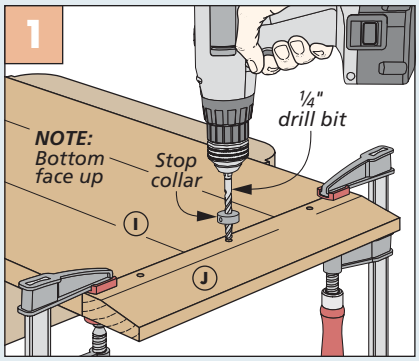

Drill Holes in Tongue. Use the breadboard ends to locate the holes in the tongue on the end of the top.

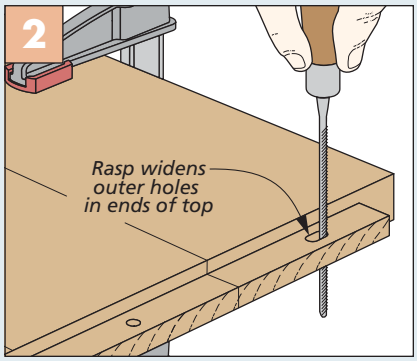

Widen Outer Holes. To allow for seasonal wood movement, widen the outer holes with a rasp.

Materials, Supplies & Cutting Diagram

A	Brace (2)	3 x 3 - 13	**E**	Short Stretchers (2)	2⅜ x 5 - 10½	**I**	Top (1)	⅞ x 15 - 48
B	Feet (2)	3 x 3½ - 15	**F**	Splines (3)	½ x 4¾ - 1½	**J**	Breadboard Ends (2)	⅞ x 3 - 15
C	Legs (4)	2½ x 2½ - 25⅛	**G**	Stretcher Tenons (2)	¾ x 4 - 7	•	¼"-dia. x 12" dowel	
D	Long Stretchers (2)	2⅜ x 5 - 16 13/16	**H**	Stretcher Pins (2)	¾ x ¾ - 3¼	•	(5) 7mm x 50mm Connecting Screws	

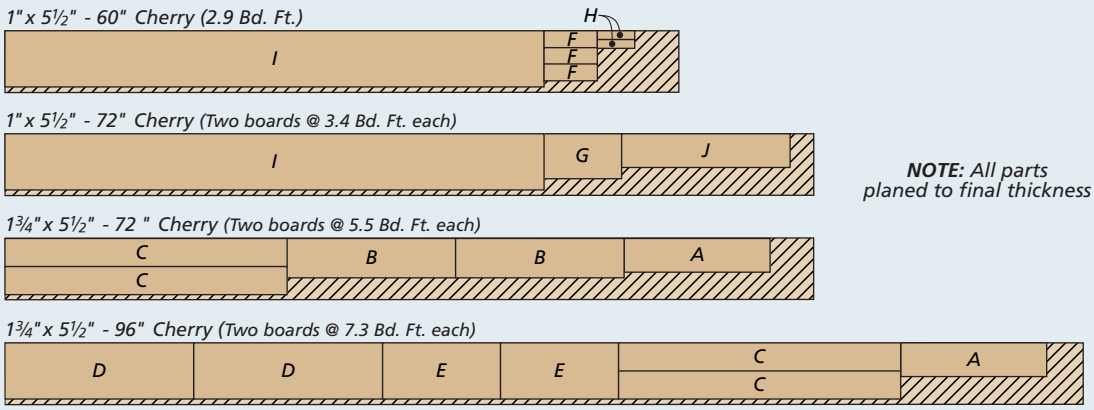

NOTE: All parts planed to final thickness

plywood projects

Bench & Tool Shelf

The simple plywood construction and solid design of this workbench and wall-mounted shelf makes a quick, low-cost addition to your workshop.

One of the most overwhelming feelings that a new woodworker can have as they're starting is the need for room to work and shop storage. You've spent time researching, looking at, and buying tools. Now, you need worksurfaces and a place to store those tools.

This five-piece plywood shop ensemble is the perfect project for the new woodworker, or the seasoned shop pro that needs additional work space or storage. It includes a workbench, tool shelf, router table, shop cart, and sawhorses. The best part is you can build all five projects using just a few sheets of plywood and a few basic tools.

When looking at the group of projects, the logical place to start is with the workbench and wall-mounted tool shelf. (The remaining projects will be covered in the next issue.) The workbench tends to be the center of any shop and this plywood workbench is no exception. It's light enough to move around, but its splayed legs and supporting ribs under the top give this bench a solid worksurface.

The wall-mounted tool shelf is a great companion piece to the workbench. When hanging above the bench, it's the perfect spot to store small power tools like a drill or palm sander, or even boxes of fasteners and cans of finish. The built-in tool rack is a handy spot for all of those tools that you need close by while working at the bench.

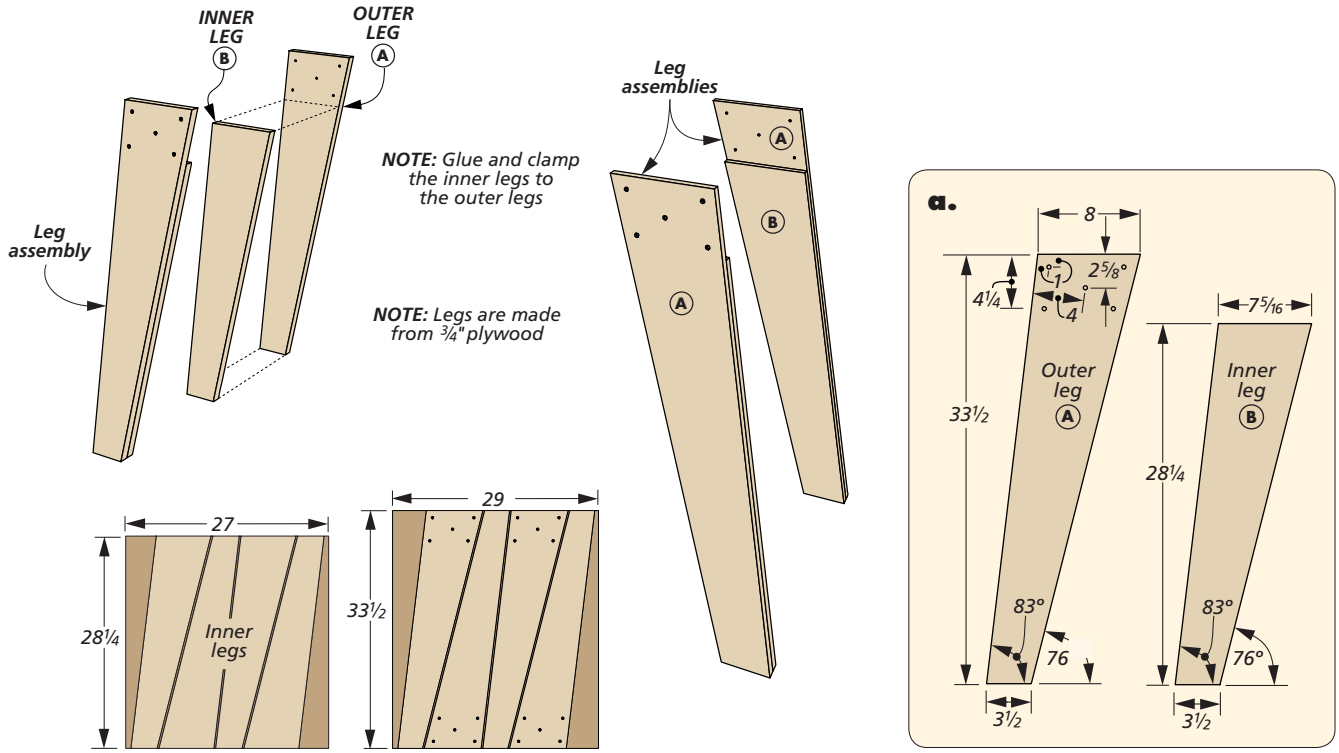

LEG CONSTRUCTION

All of the projects in this series are built out of ¾" pine plywood. Any ¾" plywood will work, but the key is to make sure that it's flat and has at least two true edges. Keep in mind that higher quality plywood will have less voids and defects. If you'd like a little bit more weight in your workbench, MDF could be used for the top and shelf instead of plywood. However, MDF is not quite as durable as plywood and could wear faster.

SPLAYED LEGS. Like I mentioned earlier, the splayed legs on this workbench are the key to its stoutness. As you can see in the illustration above, the legs are made from two layers of plywood that are glued up to create a 1½"-thick leg assembly. Note that the outer leg is longer than the inner leg to create a ledge for the top assembly later on.

The layout of the legs is about the trickiest part of this bench, but don't let the angles scare you. Simply cut a couple pieces of plywood to the dimensions shown above. You can then use the dimensions shown in detail 'a' to layout the legs. This method results in a minimal amount of cuts and less waste. And speaking of cuts, I used a simple, shop-made guide for use with a circular saw. The details for the cutting guide are shown in the How-To box below.

The outer leg gets predrilled at the top, as shown in detail 'a'. Then, the outer and inner legs are glued and clamped together. With the leg assemblies ready, you can move on to the top.

How-To: MAKE A CUTTING GUIDE

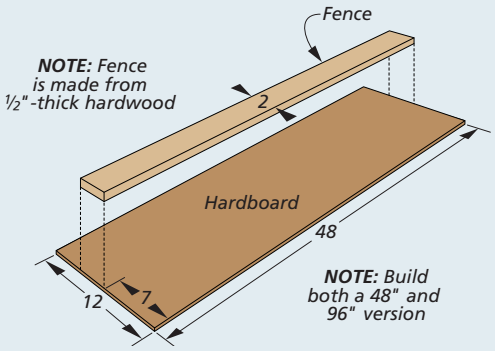

Build the Guide. Using a piece of ¼" hardboard as a base, glue a hardwood fence on top.

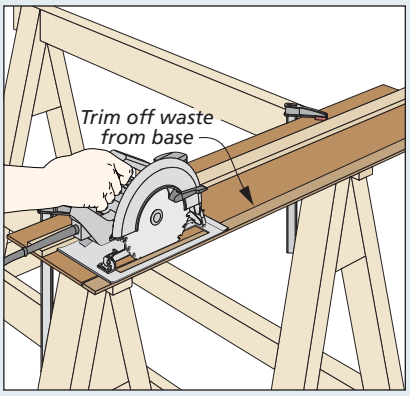

Trim Waste. Clamp the guide down and use your circular saw against the fence to remove the waste.

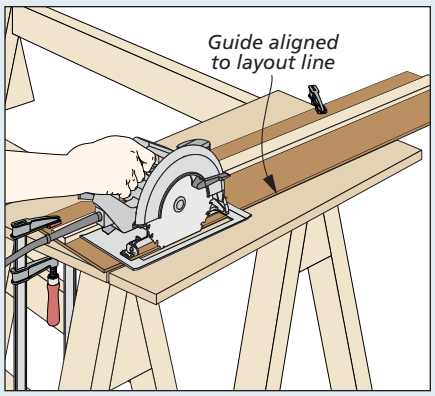

Making Cuts. Simply align the edge of the guide to your layout line, clamp it down and make your cut.

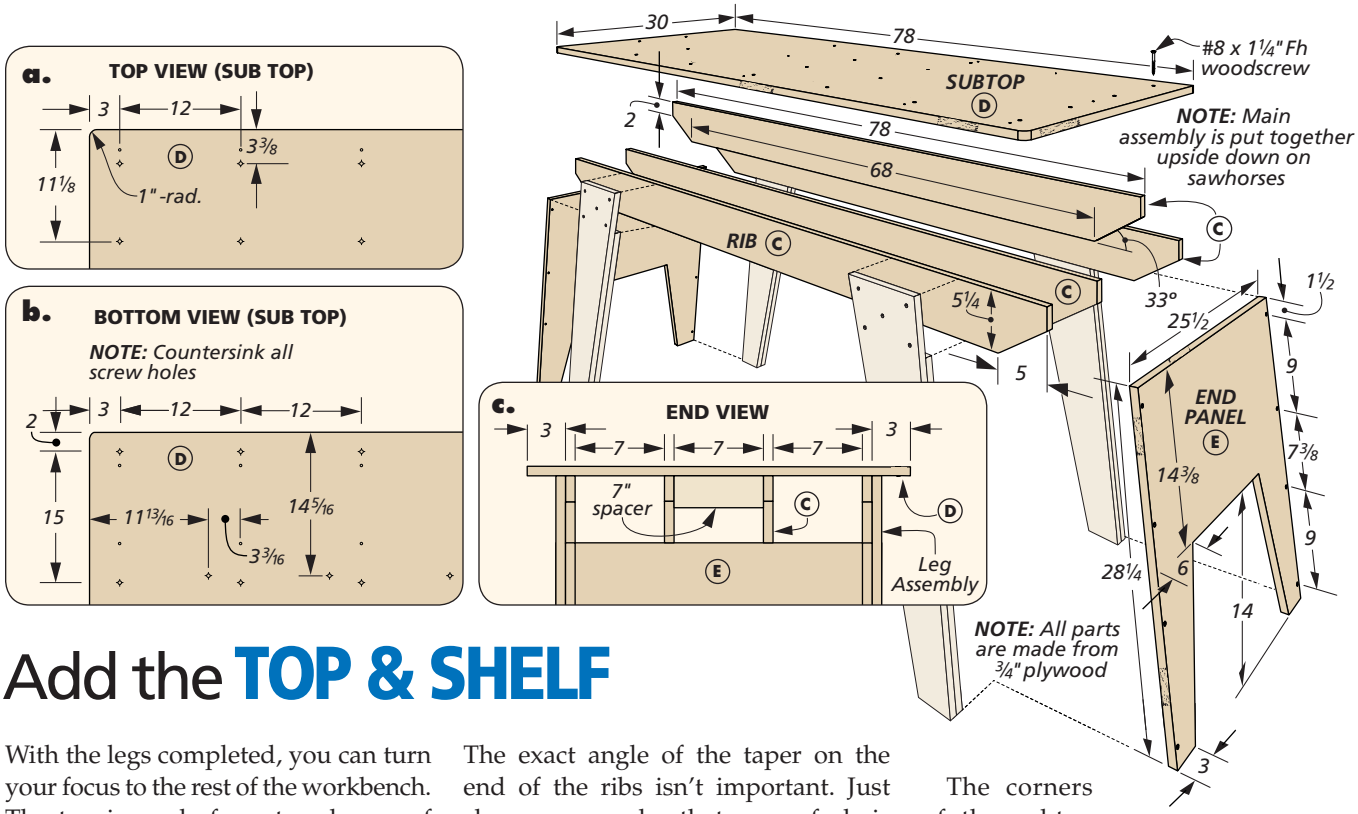

Add the TOP & SHELF

With the legs completed, you can turn your focus to the rest of the workbench. The top is made from two layers of plywood—the main top and subtop. Underneath the top are four ribs that provide support along the length of the top to prevent sagging.

RIBS. In addition to providing rigidity, the ribs also serve as an anchor point for attaching the top to the leg assemblies. In order to cut the ribs, I used a longer version of the circular saw guide that I used on the legs.

After cutting the rib to length, I used my miter saw set at 33° to clip the corners. The exact angle of the taper on the end of the ribs isn't important. Just chose an angle that you feel is aesthetically pleasing and is easy to cut on your miter saw.

SUB & MAIN TOP. The two-layer top is key to adding weight to the workbench. The main top acts as your worksurface while the subtop is fastened to the ribs below. To cut out both tops, I used the circular saw guide. The subtop is cut to finished size, but the main top is left slightly oversized and set aside for now.

The corners of the subtop are rounded. I cut a 1" radius with a jig saw and sanded to the line. Layout lines are then drawn on the subtop for locating the screw holes needed to attach the ribs. Details 'a' and 'b' provide all the information you'll need.

END PANELS. The leg assemblies are connected by two end panels. The dimensions for the end panels are shown in the illustration above. To cut the opening in each end panel, check out the How-To box below.

How-To: CUT END PANELS & ASSEMBLE

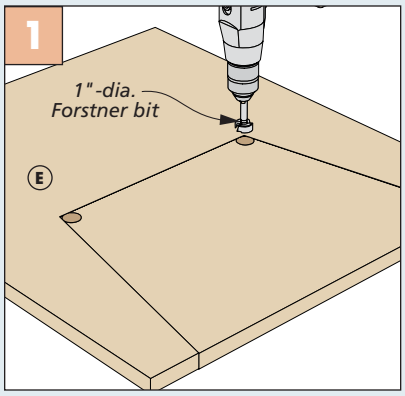

Clean Corners. Define the inside corner of the end panels using a 1"-dia. Forstner bit.

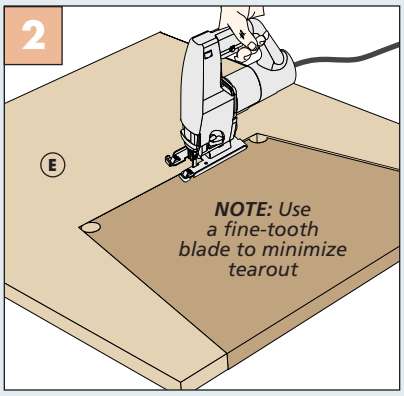

Clean Cuts. After drilling the corners, the waste is removed using a jigsaw with a fine-tooth blade.

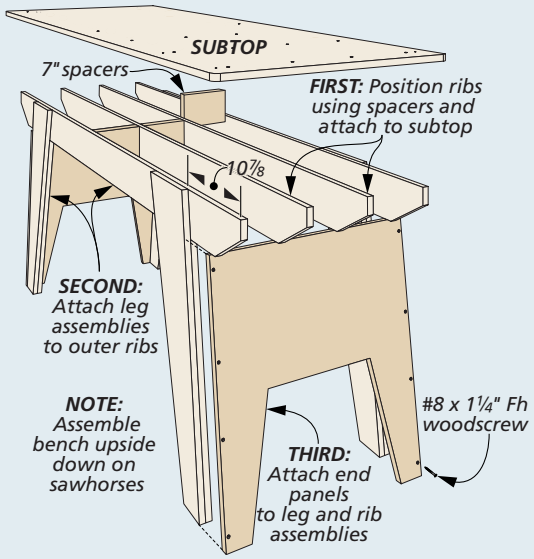

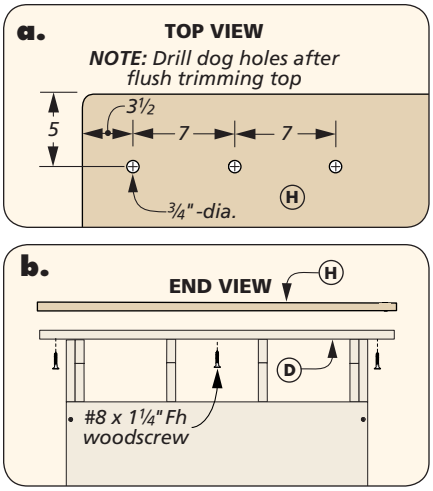

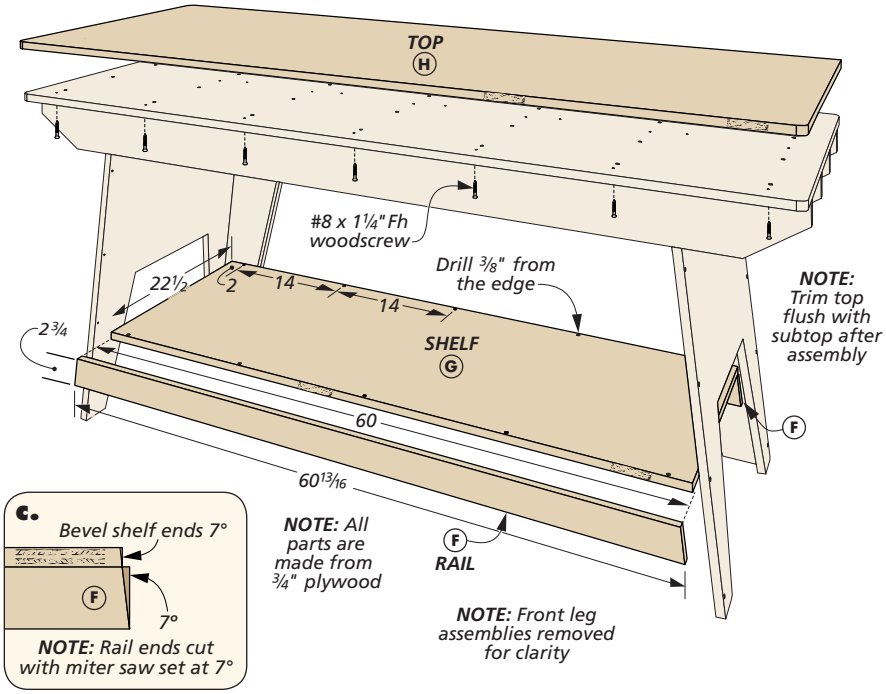

PUTTING IT ALL TOGETHER. Now you're ready to do a little preassembly. The first order of business is to attach the ribs to the subtop. See the lower right drawing on previous page. This procedure is best done on a pair of sawhorses, with the subtop upside down.

Using the layout marks, carefully align the first rib and glue it and secure it through the top using screws from below. Next, I positioned the rest of the ribs using 7" spacer blocks, as shown in detail 'c' on the previous page. After all the ribs are attached, the leg assemblies can be added. Using glue and screws, attach the legs to the outermost ribs. With the legs attached to the rib and subtop assembly, install the end panels using screws, also.

SHELF AND RAILS

A pair of rails support the shelf surface between the leg assemblies. The ends of the rails are cut at a 97° angle to seat inside the angle of the legs, as shown in the main drawing and detail 'c' above. The shelf is also beveled along both ends to match the angle of the bench rails. Holes along the front and back allow it to be attached to the rails.

With the bench still upside down, drop the shelf assembly into place between the two sets of legs, as shown in the lower left drawing. Secure the shelf rails to the legs.

RIGHT SIDE UP. Once you have the shelf in place you can turn the bench upright. Center the main top on the subtop and glue and screw them together from underneath. Next, grab a router with a flush trim bit and trim around the main top, making it flush with the subtop (middle box below). Lay out the dog holes according to detail 'a' above in order to avoid screws and the ribs. Drill the dog holes using a Forstner bit, as shown in the right box below. Take care when drilling the dog holes to keep the drill square to the benchtop.

How-To: FINISH THE TOP

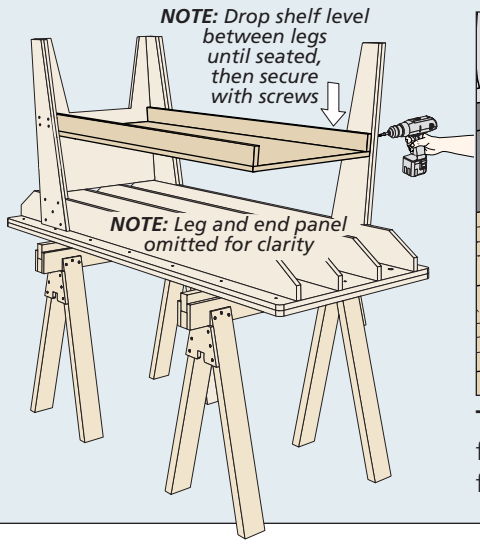

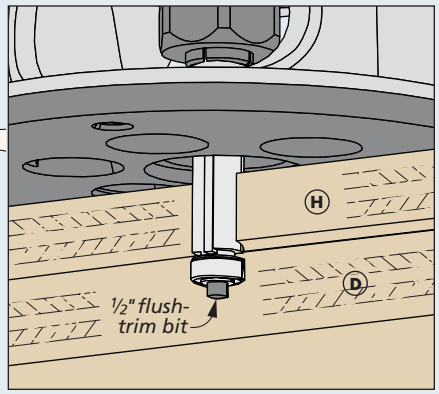

Trim Main Top. Using a router and a flush trim bit allows you to trim the top flush with the subtop.

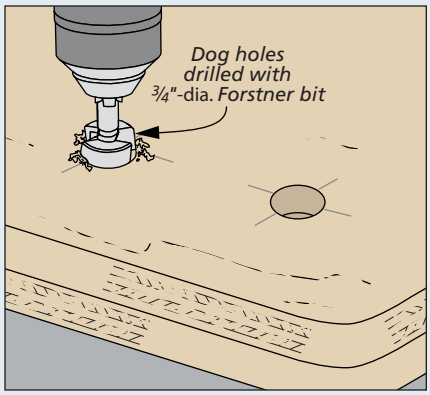

Dog Holes. Following the layout lines to avoid hitting screws, drill dog holes using a ¾"-dia. Forstner bit.

Wall-mounted TOOL SHELF

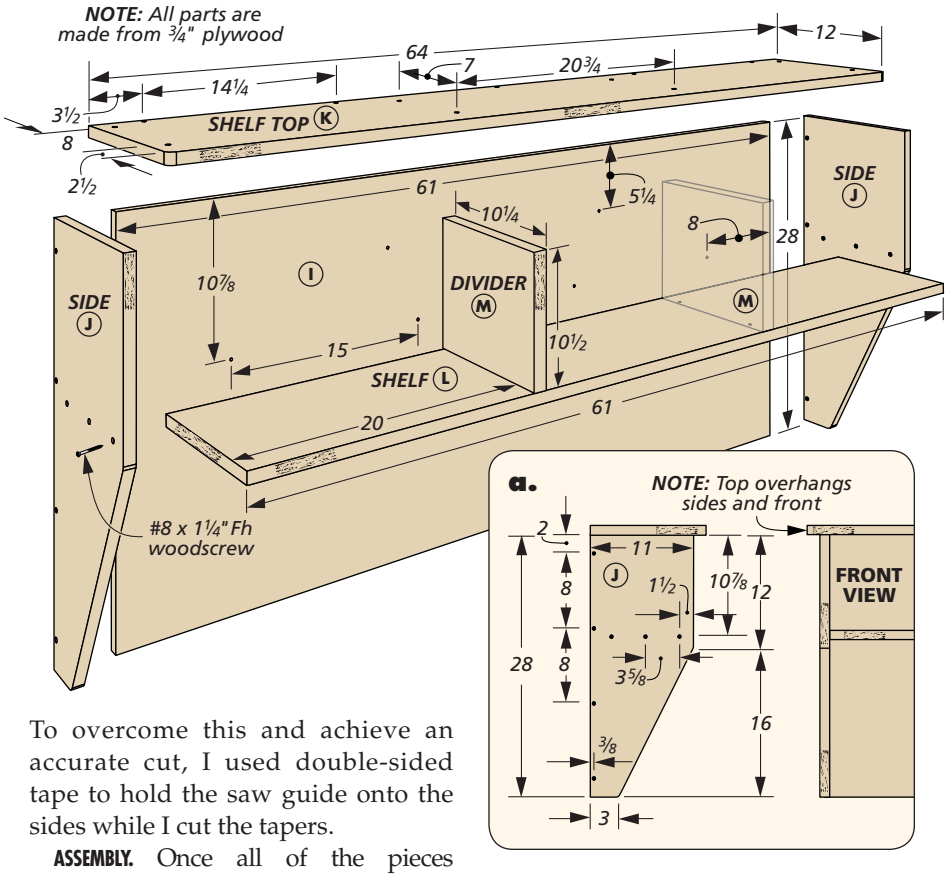

Now that you've finished the workbench and have a nice worksurface to use, you can start working on the tool shelf. If you're like me, you spend more time looking for a tool or shuffling stuff on your bench trying to make room than actually working on a project. It's frustrating and leads to lost productivity in the shop. Having this tool shelf mounted above the bench helps alleviate some of this burden.

EASY DOES IT. One thing that I love about this tool shelf (and all of the projects in this series) is they're easy to assemble. There's no need for fancy connectors or complex joinery. Butt joints with glue and screws will lead to years of use in your shop.

CASE. As you can see at right, the pieces for the shelf are straightforward. I cut out the pieces for the shelf, starting with the back.

The sides of the shelf are tapered at the front edge. This taper can be a little tricky to cut, as the piece is small enough there's not much room to clamp the circular saw guide down. To overcome this and achieve an accurate cut, I used double-sided tape to hold the saw guide onto the sides while I cut the tapers.

ASSEMBLY. Once all of the pieces are cut to size, I started the initial assembly. The sides are attached to the back with glue and screws. Same for the top. When positioning the top, make sure that the overhang on the ends are the same. The top hangs over the front, but is flush at the back.

SHELF. In order to get an exact fit between the dividers and shelf, I cut the dividers and used them to position the shelf before drilling pilot holes. These steps are as shown in the How-To box at left. It's then a matter of attaching the shelf and dividers in place. Again, I used screws and glue. The position of the dividers is up to you and how big you want to make the cubbies. I simply broke up the shelf length into three equal segments.

How-To: ATTACH THE SHELF

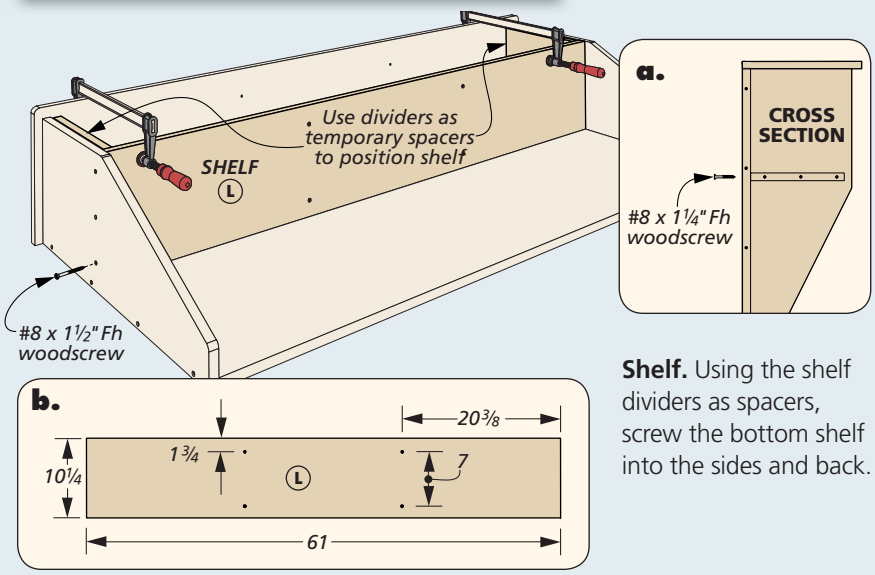

Shelf. Using the shelf dividers as spacers, screw the bottom shelf into the sides and back.

TOOL RACK

With the case completed, you'll need something to hold small hand tools. I opted for a traditional-style slotted tool rack. The rack consists of several pieces of pine. This assembly is attached to the back. You could also substitute strips of plywood to build the rack.

To create the slot for tools to sit in, there are four spacers between the rack rails as shown in the drawing on the next page. Because the spacers are small, make sure to pre-drill the screw holes to avoid splitting the wood.

FINISHING. Finishing both the shelf and the workbench is simple. After a quick sanding and breaking all of the edges with sandpaper, I removed the tool rack from the shelf. The lower base of the workbench and the tool shelf were painted with *General Finishes* Milk Paint. I chose "Tuscan Red" for the color. The milk paint from *General Finishes* is not a true milk paint. It's a modern blend using strong mineral pigment, and not using casein or milk. This means, none of the smell that's traditionally associated with milk paint.

While the paint was drying, a few coats of lacquer were applied to the tool rack. The ribs and top of the workbench also received lacquer. This helps add some protection and makes cleaning up the workbench top easy. After the paint and lacquer are dry, the tool rack can be reattached to the shelf.

LOOKING AHEAD. Now you've completed both a sturdy workbench and a tool shelf. Both of these projects are a great start to building a woodshop. In the next issue, we'll be looking at expanding your shop further. We'll start off by building a stand that can double as a router table or a miter saw station. To complement this stand, we'll be building a pair of standing supports that can serve as outfeed support for long pieces at the table saw. Additionally, the supports can serve as a set of sawhorses. Finally, a cart serves as a rolling assembly table, as well as provides a bonus worksurface for further projects. The rolling cart completes the set. W

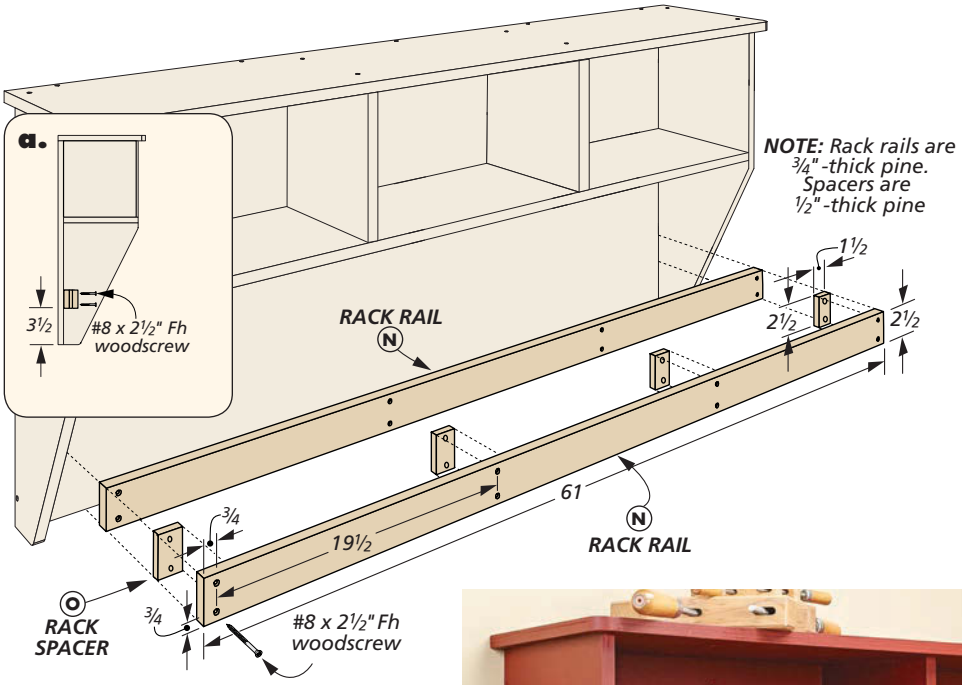

▲ The cubbies house supplies that are needed at the bench, as well as storage for often-used hand tools.

Materials, Supplies & Cutting Diagram

A	Outer Legs (4)	¾ ply. - 8 x 33½	**G**	Shelf (1)	¾ ply. - 22½ x 60	**M**	Dividers (2)	¾ ply. - 10¼ x 10½
B	Inner Legs (4)	¾ ply. - 7 5/16 x 28¼	**H**	Top (1)	¾ ply. - 30 x 78	**N**	Rack Rails (2)	¾ x 2½ - 61
C	Ribs (4)	¾ ply. - 5¼ x 78	**I**	Back (1)	¾ ply. - 28 x 61	**O**	Rack Spacers (4)	½ x 1½ - 2½
D	Subtop (1)	¾ ply. - 30 x 78	**J**	Sides (2)	¾ ply. - 11x 28	•	(148) #8 x 1¼" Fh Woodscrews	
E	End Panels (2)	¾ ply. - 25½ x 28⅜	**K**	Shelf Top (1)	¾ ply. - 12 x 64	•	(8) #8 x 2½" Fh Woodscrews	
F	Bench Rails (2)	¾ ply. - 2¾ x 60 13/16	**L**	Shelf (1)	¾ ply. - 10¼ x 61			

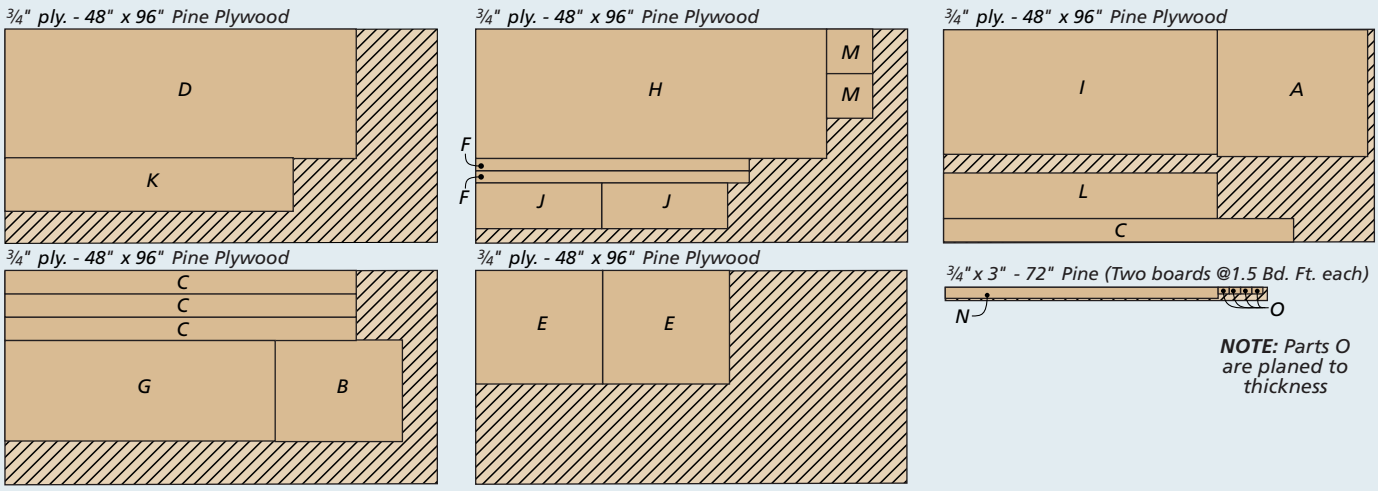

Heirloom Project

Greene & Greene-style Bookcase

The classic design of this project, along with your careful attention to detail, will steal the show in any room in the house.

Building a piece of Greene and Greene-inspired furniture ranks pretty high on many woodworker's bucket list. The distinctive styling details and traditional joinery provides plenty of challenges along the way. But the payoff at the end is well worth the journey.

DESIGN FEATURES. Nothing is more striking with Greene and Greene designs than the use of offset surfaces, subtle curves, and contrasting accents. We've provided a heaping helping of all those aspects in this bookcase. The bold styling of the signature "cloud-lift" details in the door frames, along with the ebony accents used throughout, lend a feel of authenticity to this project.

TIME-HONORED JOINERY. A true feature of Greene brothers furniture is the prevalence of exposed joinery as part of the design. The box jointed drawers and the breadboard ends on the top are perfect examples.

We stuck with the traditional lumber used for most Greene and Greene furniture — mahogany. But this piece would also look great made out of a number of other hardwoods. Now sharpen up your tools and settle in to build this classic piece of furniture.

Construction Overview / OVERALL DIMENSIONS: 44½"W x 63"H x 15⅛"D

Breadboard ends are designed to accommodate wood movement

Ebony splines and inserts offer a striking contrast to the mahogany

Three thick, adjustable shelves provide plenty of storage options

Mortise and tenon joinery is used throughout to secure the posts and rails

Door frame is rabbeted to accept a single rectangular glass pane

The drawers are constructed using tongue and dado and box joints

Shop-made pulls are featured on the doors and drawers

The cloud-lift feature in the door frames is distinctly Greene and Greene

NOTE: Article on page 56 describes the technique used to make and install small ebony plugs

NOTE: Turn to Sources on page 67 for hardware and finishing information

▲ The eyes are naturally drawn to the bold styling of the cloud-lift details in the rails and muntins.

▲ The large box joints connecting the drawer fronts and sides become a focal point of their own.

Making the END ASSEMBLIES

At the structural heart of the bookcase are four beefy corner posts. To achieve the best appearance, I made them from solid stock. The posts receive a series of mortises, grooves, and dadoes that hold the rails and plywood panels. Once together, these parts form stout end assemblies.

PROPER ORIENTATION. Right away, you'll notice that the posts are not square, but rather rectangular. The narrow faces are positioned towards the front and back of the bookcase. Also, when the joinery is cut, the two front posts are mirror-images of one another, as are the two back posts. With this in mind, cut the posts to size and label them to help keep things straight.

MORTISES FIRST. Now you're ready to cut some joinery. The How-To box on the next page will walk you through most of it. I started by laying out and cutting the mortises for the rails. Figure 1 has the details. Be sure to note the different mortise sizes and placements as noted in the details below.

LONG GROOVES. Next, cut the grooves in the posts for the end and back panels. The front posts each have one groove for the end panels while the rear posts each

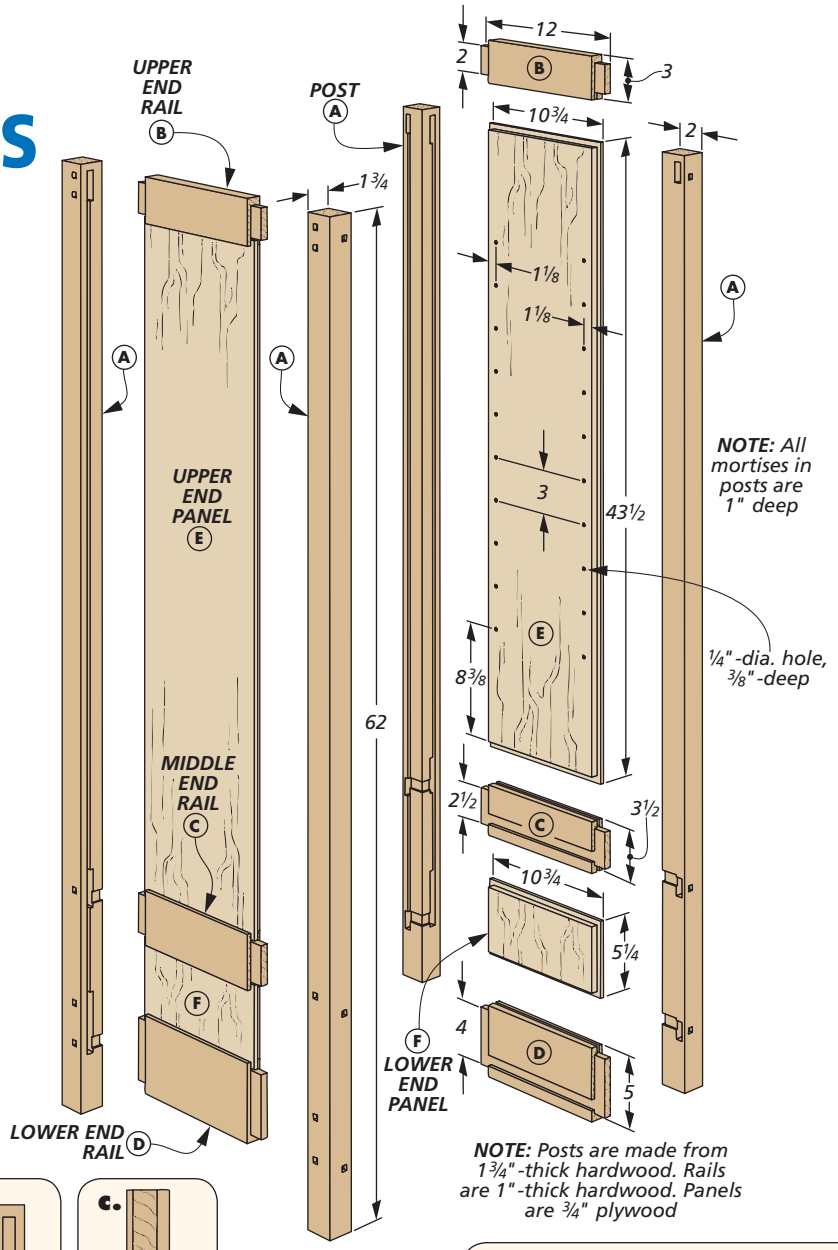

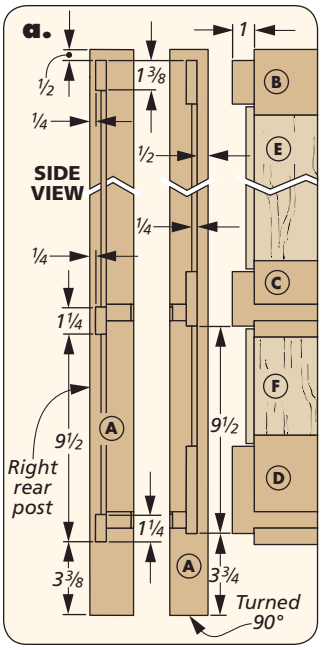

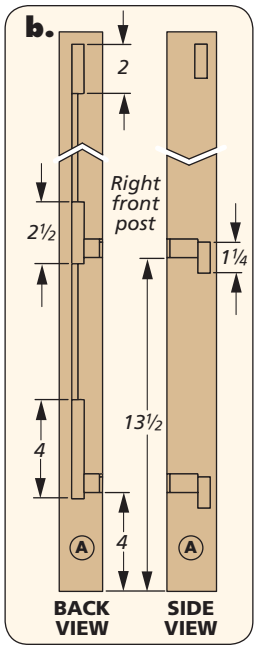

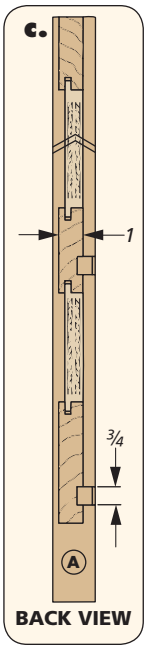

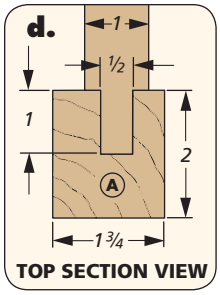

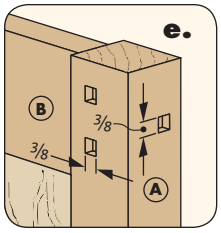

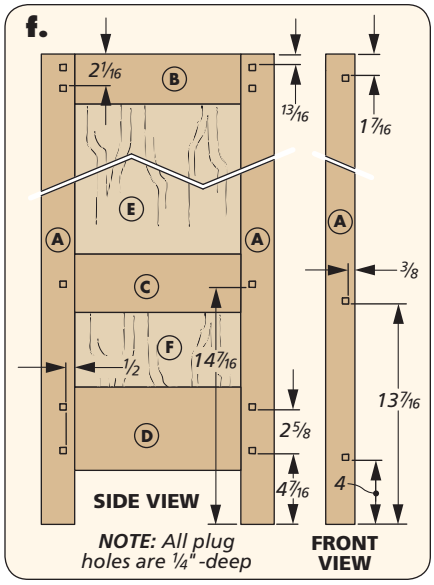

have two grooves for the end and rear panels. These are easy to make at the router table (Figure 2). Simply rout from the lower mortise to the top mortise, or vice versa depending on the post.

SHALLOW DADOES. The information for the shallow dadoes that wrap the inside post corners and "connect" the lower and middle mortises is provided in the details on the previous page. Nothing tricky here to make these, just grab a mallet and chisel to chop them out (Figure 3).

ACCENT PLUGS. One thing I'd like to point out before moving on from the posts are the ebony plugs you see on several parts of the bookcase. Each plug is housed in a shallow mortise. And I'm not going to lie — cutting all of the mortises to house the plugs is a time-consuming task.

If you own a mortise machine, this would be the perfect project to put it to work. However, if you don't own one, don't worry. The article on page 56 shows an alternative method for creating the shallow mortises for the plugs. The same article also shows how to make and install the plugs.

You can cut the plug mortises in the posts at this point if you'd like, but wait to install the plugs until after the project has a finish applied later on.

THICK RAILS. Now you can move on to the end rails which are pretty straightforward, as well. After cutting the three different width rails to size, Figures 4 and 5 show how to cut the tenons on the ends and the offset grooves for the panels along the edges. Be sure to note that the middle rails have grooves on both their upper and lower edges.

With the rails done, check the fit of the tenons in the mortises in the posts. While they're in place, mark the location for the grooves in the middle and lower rails, as shown in Figure 6. These grooves can be cut at the table saw (Figure 7).

PANELS. The final parts for the end assemblies are the plywood end panels. Cut the panels to size and then switch back to a dado blade to cut the rabbets around the perimeter of each one (Figure 8). The shelf pin holes are up next. Use the dimensions on the previous page to position them. Finally, you can bring each end assembly together with glue and clamps.

How-To: MAKE POSTS, RAILS & PANELS

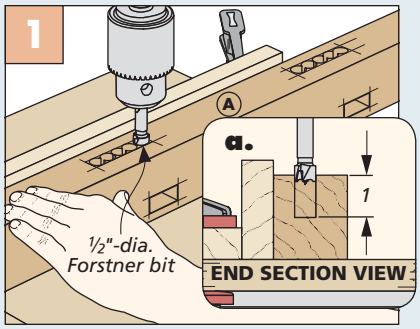

Mortises. Use a Forstner bit to remove most of the mortise waste. Square up the corners with a chisel.

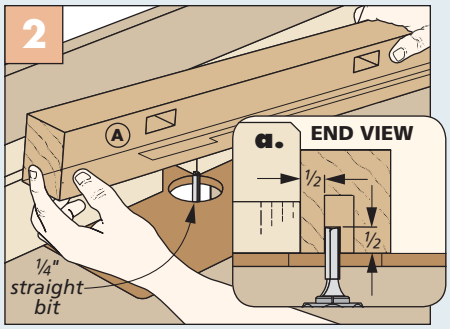

Grooves. Rout the long grooves for the panels at the router table. Start in one mortise and finish at the other end.

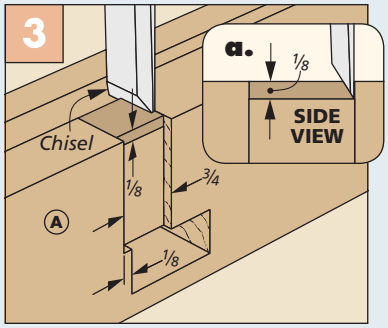

Shallow Dadoes. Use a chisel to define the edges of the dadoes and then remove the waste.

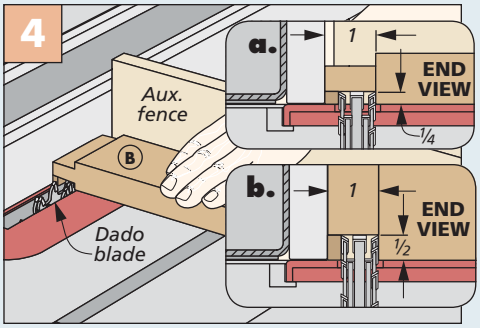

Tenons. Head over to the table saw to form the tenons on the rails. Note the shoulders are deeper than the cheeks.

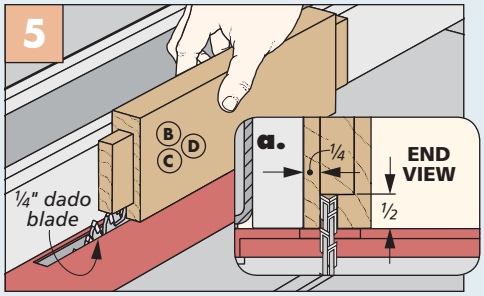

Rail Grooves. Stay at the table saw to cut the offset grooves in the rails. The middle rail is grooved on both edges.

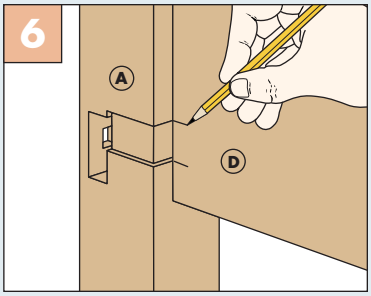

Mark Grooves. With the rails in position in the posts, mark the location for the wide grooves.

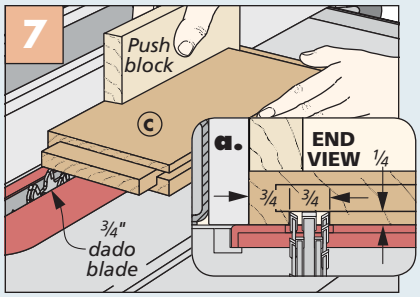

Wide Grooves. A wide dado stack will make quick work of the grooves in the middle and lower side rails.

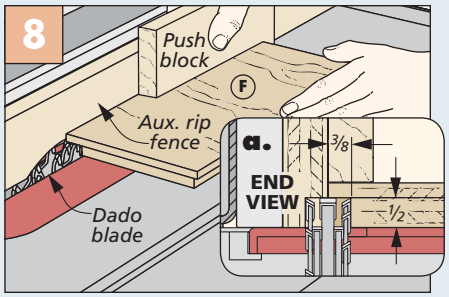

Rabbet Panels. Switch back to a dado blade to cut the rabbets around the perimeter of the plywood side panels.

Add rails, dividers & BACK PANELS

With the end assemblies wrapped up, bringing them together is next on the agenda. This is accomplished by making a series of rails and dividers to bridge the ends. Adding the plywood back panels will complete the basic case. I started by cutting all six rails to size. Note that the two upper rails are wider than the others.

TENONS & GROOVES. Each rail has tenons on the ends to fit the mortises in the posts. You'll head to the table saw to make these using the same method as the end rails. Be sure to notice that the upper rail tenons are offset slightly (details 'a' & 'b').

Also, like the end rails, the back rails need offset grooves to hold the back panels (details 'a,' 'c' & 'e'). The middle rail has grooves on both edges. Again, a dado blade makes quick work here.

RABBETS FOR DIVIDERS. You can stay at the table saw for this next procedure, as well. The four lower rails need rabbets on their inner edges. These rabbets "wrap" the two dividers you'll make shortly. Figure 1 below provides the details for making the rabbets.

BACK PANELS. When designing this bookcase, I decided that I wanted it to look just as good from the back as

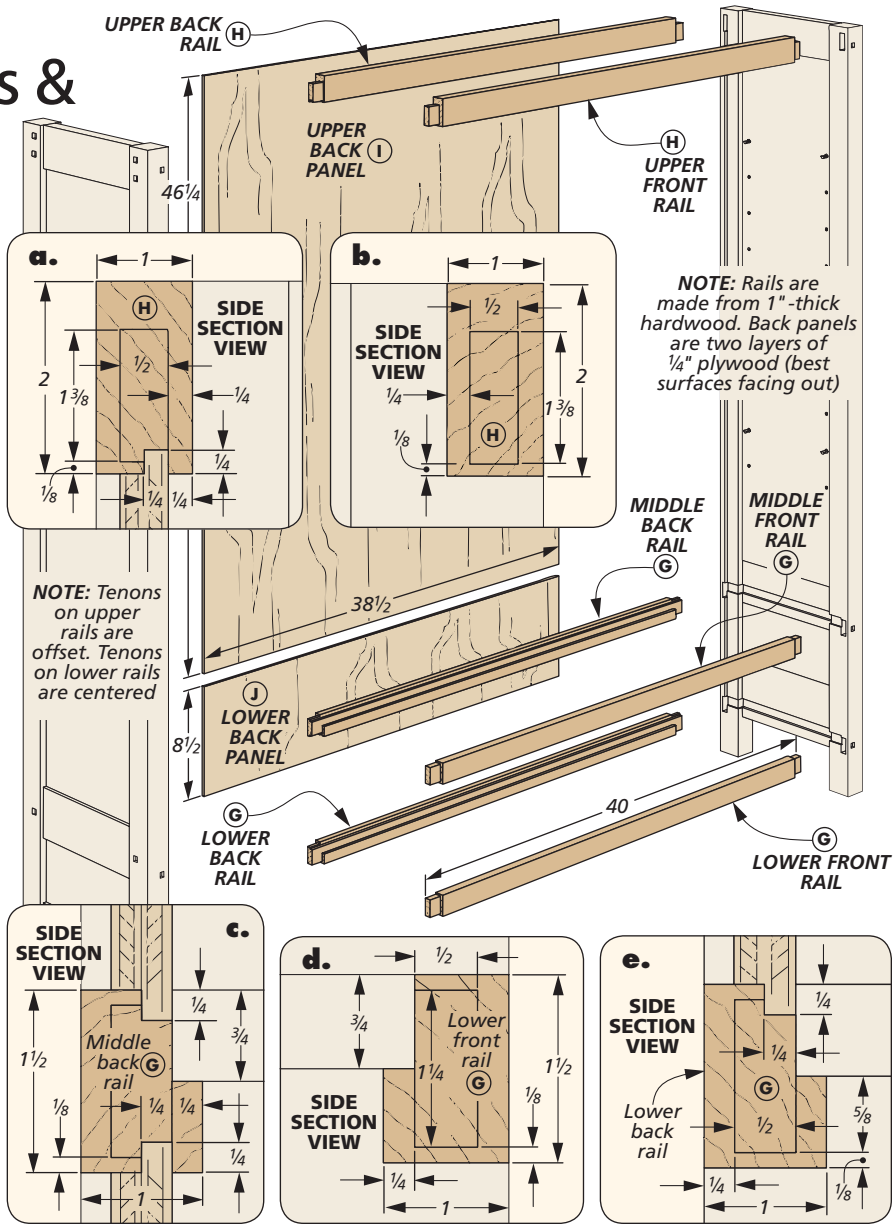

How-To: MAKE THE INTERIOR PARTS

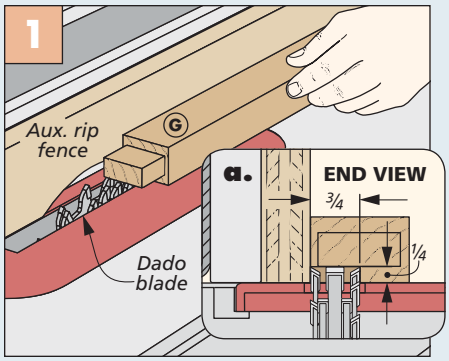

Rabbet Rails. The rabbets in the four lower rails go quickly using a dado blade at the table saw.

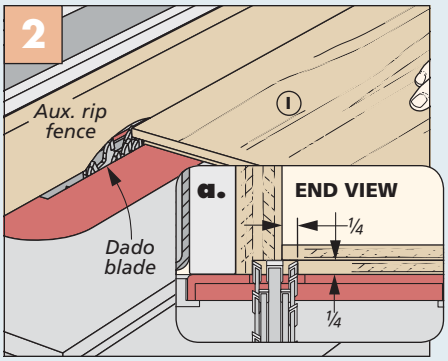

Rabbets. Stick with a dado blade to make the rabbets around the perimeter of the upper and lower panels.

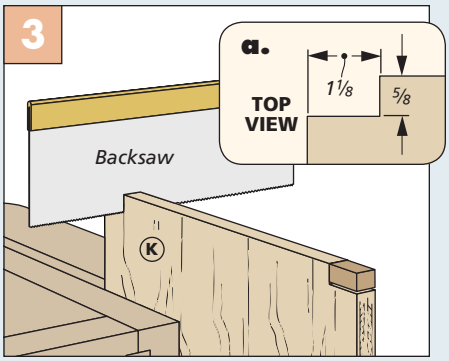

Notch Dividers. Use a handsaw to cut the notches in the corners of the two plywood dividers.

it does from the front. So, for the back panels, I opted to face-glue oversize pieces of ¼" plywood so their "show" sides were facing out. Contact cement is the perfect adhesive for this.

After bringing the panels to size, make a quick trip back to the table saw to cut the rabbets around the perimeters of the panels, as shown in Figure 2 at the bottom of the previous page. These rabbets form the tongue that fits in the rail and post grooves.

DIVIDERS & ASSEMBLY

The plywood dividers are up next. The two horizontal dividers have a dado on their inside face to hold the shorter drawer divider. Use a dado blade at the table saw to cut these centered dadoes. You can then pull out a handsaw to cut the notches in the corners on all three workpieces (Figure 3).

TRIAL ASSEMBLY. At this point, I found it beneficial to do a test fit of all the rails, dividers, and back panels. While I had things clamped up (but without glue), I marked the location of the lower and middle rails in relation to the horizontal dividers. Once you're satisfied with the fit of the parts, remove the clamps and glue the two horizontal dividers into the rabbets of their respective rails, as shown in Figure 4 below.

ASSEMBLE. When the divider assemblies come out of the clamps, the rest of the assembly process can begin. Figures 5 and 6 below show the steps I used to bring everything together. With all of the parts being added at once, I would recommend recruiting a helper for this task. This will make the job go much smoother. With the last clamps in place, the drawer divider edging can be cut to size and glued in position. I used several pieces of masking tape to hold it in place while the glue set up.

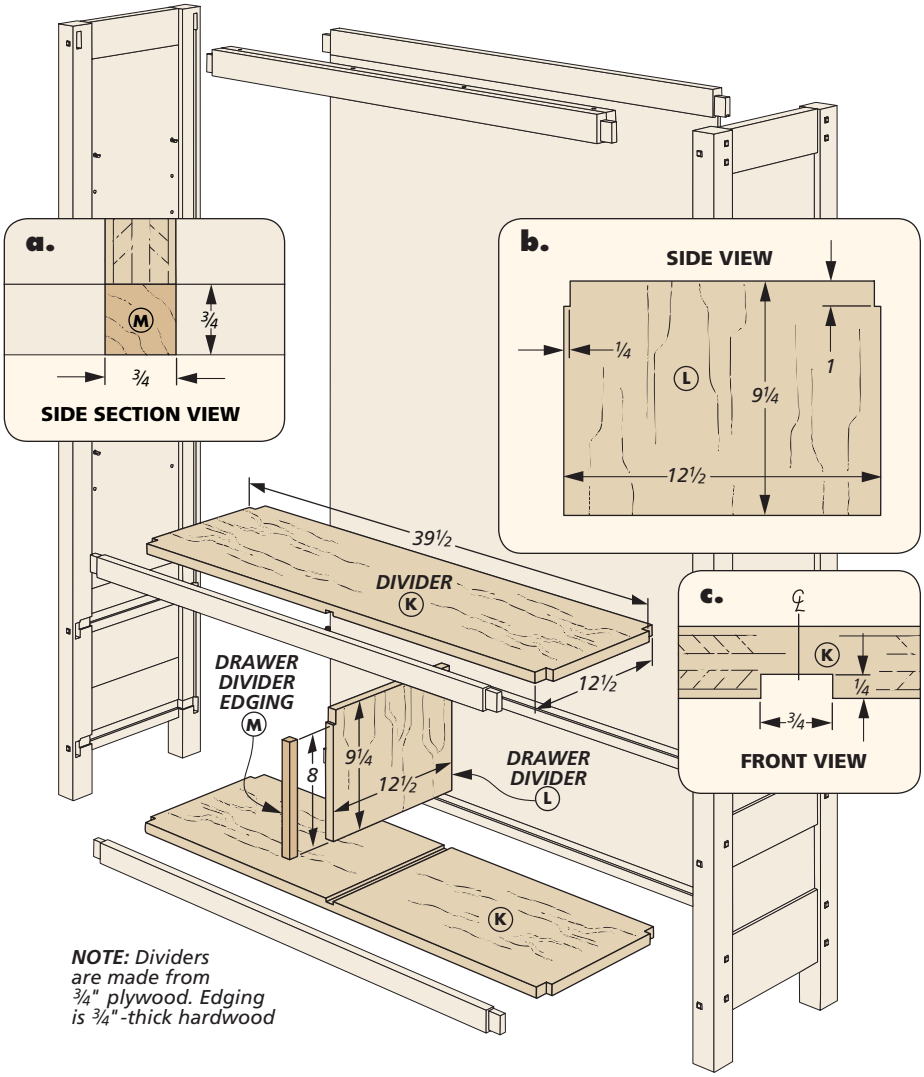

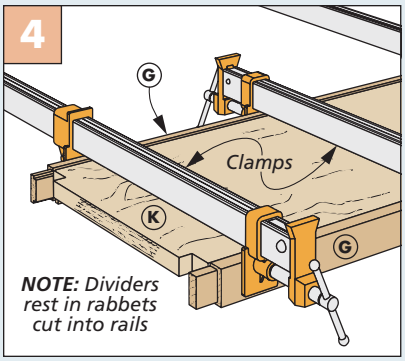

Preassembly. After test-fitting the parts, glue the four lower rails to the front and rear of the dividers.

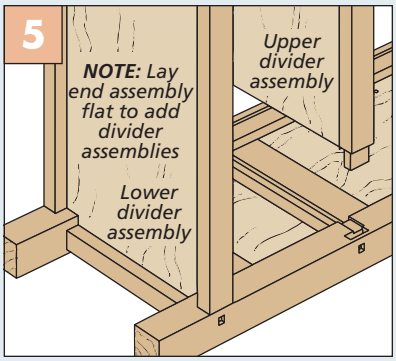

Add the Middle Parts. Glue the divider assemblies in place. Don't forget the drawer divider, as well.

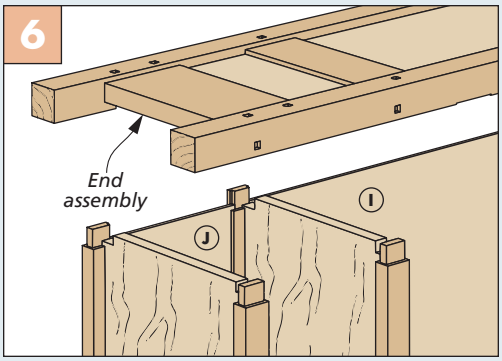

Add Backs & End Assembly. With all of the dividers in place, slip the back panels in their grooves and add the other end assembly.

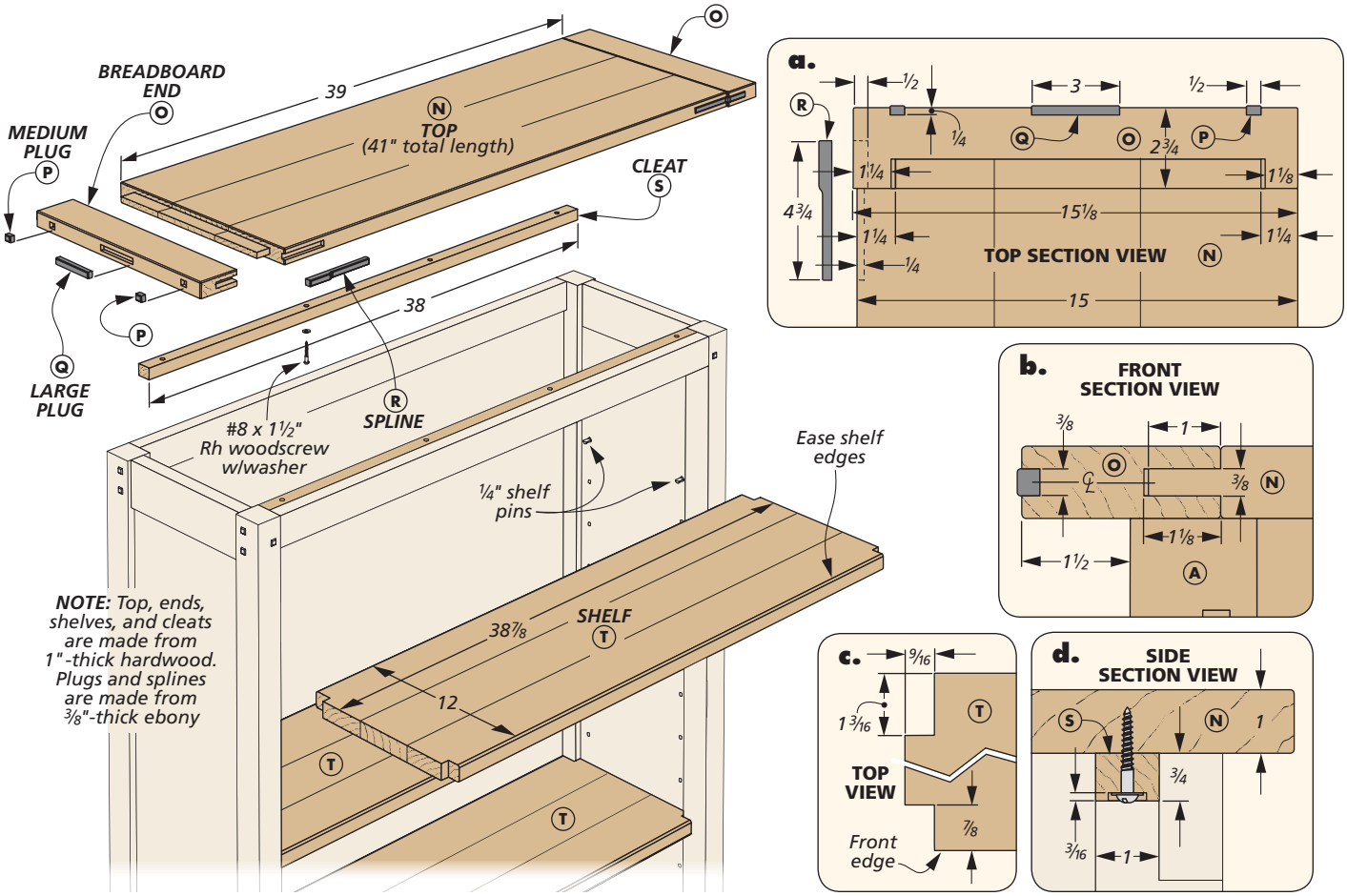

Making the TOP & SHELVES

Adding the three adjustable shelves to the bookcase is pretty straightforward. So instead of starting here, I began by tackling the more demanding task of making the top.

TOP PANEL. This classic Greene and Greene-style top features breadboard ends that are offset with the front edge of the panel. Several contrasting plugs accent the mahogany and, in the case of the long splines along the front, act to partially disguise any seasonal movement of the wood.

Once the 1"-thick top panel is glued up and cut to final size, you can start

How-To: CUT BREADBOARD JOINERY

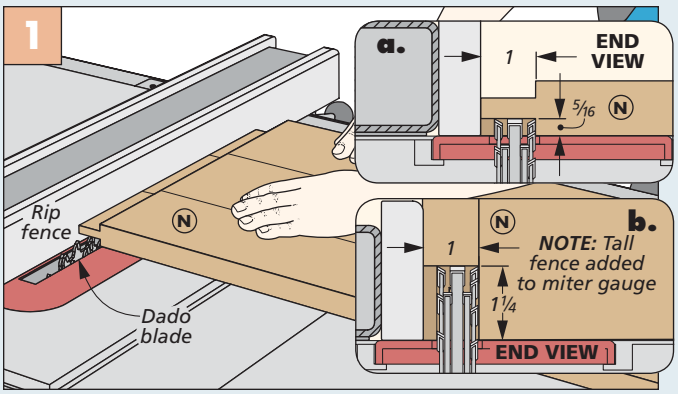

Wide Tongues. Use a dado blade at the table saw to cut the rabbets that form the tongues on the top. A tall auxiliary fence is added to the miter gauge to cut the shoulders.

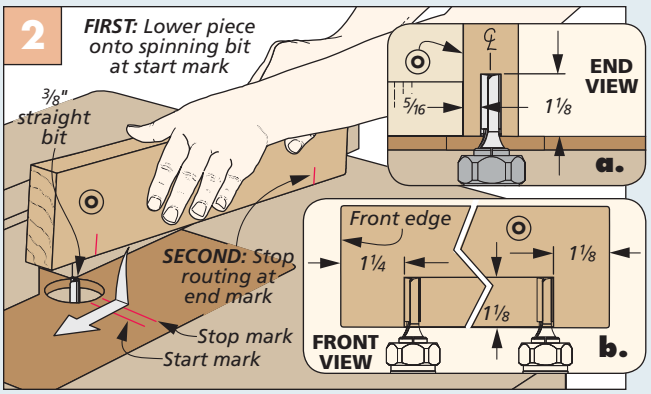

Breadboard Grooves. Mark the end points on the workpiece, turn on the router and lower the piece onto the bit. Make multiple passes to reach final depth.

work on the details. The breadboard ends are attached with a tongue and groove joint. The tongue is formed on the ends of the top, so this is the first job. Cut the rabbets that form the tongue at the table saw. The details are shown in Figure 1 on the previous page. The shoulders can be finished up here as well, using a tall auxiliary miter fence to support the wide panel (Figure 1b).

BREADBOARD ENDS. As I noted earlier, the breadboard ends stand proud of the top panel along the front edge. Keep this in mind as you cut these boards to size. The stopped grooves on the breadboard ends that slip over the tongues on the panel are next. Figure 2 on the previous page has all the details you'll need to complete these at the router table.

I also used the same method to cut the shallow mortises for the three plugs along the outside edge of the breadboard ends. Details 'a' and 'b' on the previous page show the positions of these mortises.

SPLINE SLOTS. You'll stick to the router table for the next two tasks, as well. Shallow grooves along the front edge of the top panel and the breadboard ends provide a home for an ebony spline. Figures 1 and 2 at right show this simple operation.

Before gluing the ends to the top, I eased the inside edges of the ends and the ends of the top panel with a sanding block. Now, glue the breadboard ends to the top panel with glue along the middle of the tongue only. I then eased the rest of the edges around the top. A pair of cleats glued to the upper rails provides a mounting point for the top panel assembly (detail 'd').

EBONY ACCENTS. The ebony accent pieces will finish up the top. The plugs are simple to shape. Figures 3 and 4 (at right) provide all the details for making and installing the splines, while the far right photo shows the finished look that you're aiming for.

How-To: CREATE BREADBOARD DETAILS

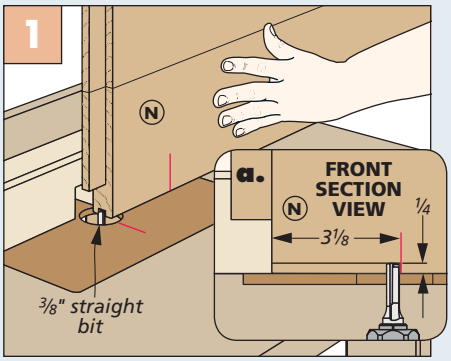

Spline Slot in Top. Use a straight bit at the router table to create the stopped slots for the long splines.

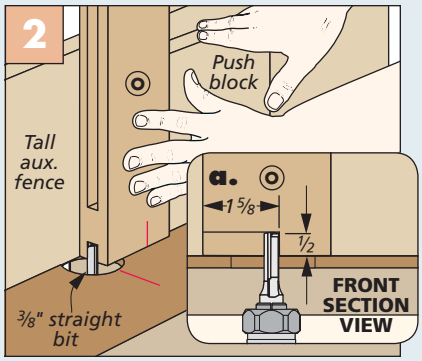

Spline Slot in End. Use the same method to cut the stopped slot in the breadboard ends.

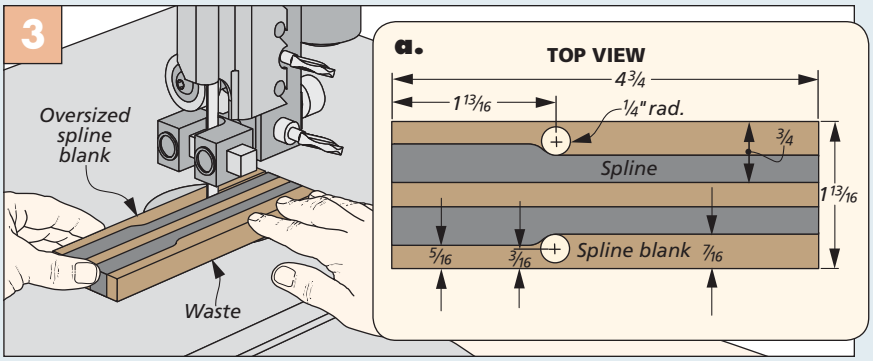

Cut Out Splines. Start with an oversized blank for making the two splines. After laying them out as shown, drill two holes to define the radius of the inside curve (detail 'a'). Then cut the splines to size at the band saw.

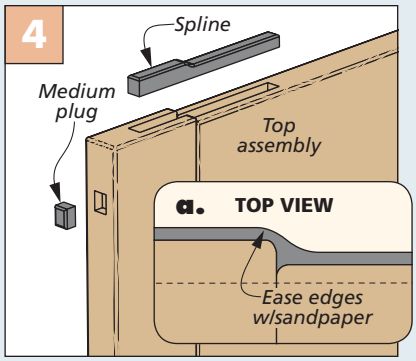

Ease the Edges. Use sandpaper to ease the edges of the splines, inserts, and plugs before gluing in place.

▲ Once installed, the splines will mask wood movement between the top and breadboard ends.

SHELVES

The shelves will be a piece of cake with the top out of the way. Similar to the top panel, I opted for beefy, 1"-thick mahogany panels for the shelf construction. This assures they'll stand up to heavy loads without sagging.

After gluing up the stock to create the shelves, cut them to their final size. For a clean, gap-free appearance, all four corners of the shelves are notched to fit around the posts at the front and rear.

I simply pulled out a handsaw to make all of these cuts. You'll notice in detail 'c' on the previous page that the notches along the back of the shelves are longer than along the front. With the notches done, I again used a sanding block to ease the front edge of each shelf.

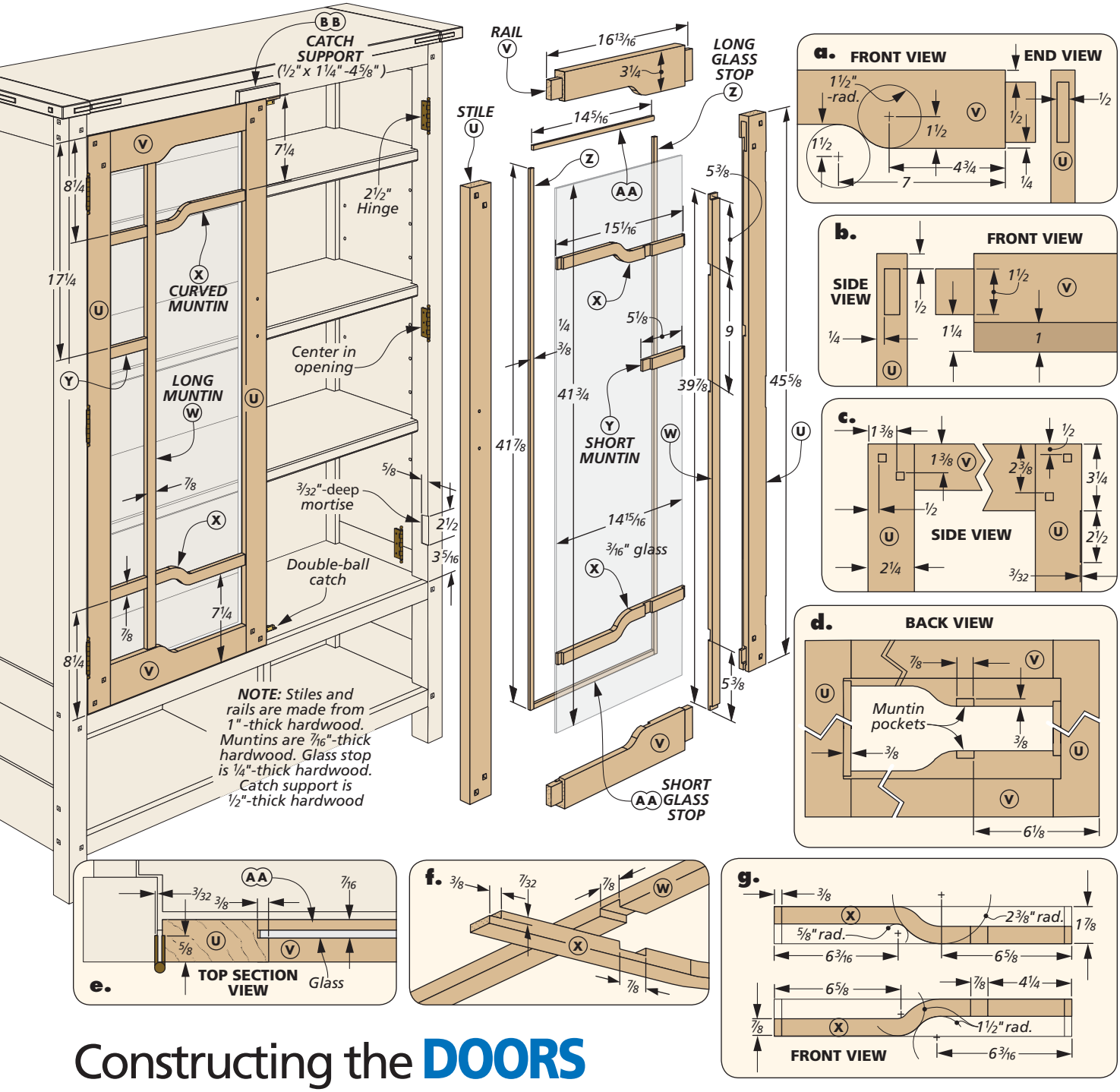

Constructing the DOORS

Enclosing the upper section of the bookcase is a decorative set of doors. In true Green and Greene style, they incorporate a common design feature called a "cloud lift." You see this feature in the rails and curved muntins.

And speaking of the muntins — at first glance, the doors appear to have true divided-light panes. But the muntins are simply recessed into the rails and stiles which allows for the use of a less expensive single piece of glass.

STILES & RAILS. I started by cutting all of the stock to size for the stiles and rails. Don't cut the profile on the rails just yet, though. As you can see in the drawings above, the rails have tenons with different widths on the ends. Likewise, the mortises in the stiles are different lengths, as well. You'll want to label the inner and outer stiles to keep things straight.

With everything labeled, the How-To box on the next page shows the method for creating the mortises (Figure 1) and cutting the tenons (Figure 2). The corners of the mortises are squared up with a chisel.

RAIL PROFILE. To complete the cloud-lift profile on the rails, I decided to create a hardboard template (Figure 3). Use the template to trace the profile on each rail. It's then just a matter of removing most of the waste at the band saw and cleaning up the cut edge with a flush-trim bit.

PARTIAL ASSEMBLY. Before gluing up the stiles and rails, I drilled the holes in the stiles for the ebony plugs. Like the posts, I used the same method as shown in the article on page 56. After these holes are finished, glue the rails into the stiles, being sure to keep the frames square and flat.

RABBET FOR GLASS. The glass pane is recessed into the back of the door frame. I used a bearing-guided rabbet bit to create this rabbet around the interior perimeter of the doors (Figure 4). But in order to fit a rectangular piece of glass in the opening, I still needed to remove a little more material on the rails around the cloud-lift detail (detail 'd,' previous page). To remove this remaining section, check out Shop Notes on page 65.

MUNTIN POCKETS. Before starting on the muntins, I marked their position on the back of the door frames. Details 'd' and 'f' on the previous page show where they're mounted. To cut these little "pockets" I simply used a chisel and mallet (Figure 5).

MUNTINS. There's nothing tricky about the long and short muntins. They're just planed to size from thicker stock and cut to size. A series of half-lap joints connect them where they intersect and rabbets on the ends fit into the pockets in the door frame.

For the curved muntins, you'll start with an oversize piece (as shown in detail 'g' on the previous page) and create the dadoes and rabbets on this larger workpiece (Figures 6 & 7). Use another hardboard template like you made earlier for the rail profile to cut out and trim the curved muntin profile to shape. Because of their small size, I would recommend doing the template shaping at the router table.

Now, you can glue the vertical muntins into their respective rabbets, then add the curved and short muntins. After a finish is applied to the doors, attach them to the case using three pairs of hinges, mortised into the doors and case. Shop Notes on page 66 provides the details.

All that's left now is to add the catch support and the double-ball catches (Figure 8), and add the door glass and stops to hold it in place.

How-To: BUILD THE DOORS

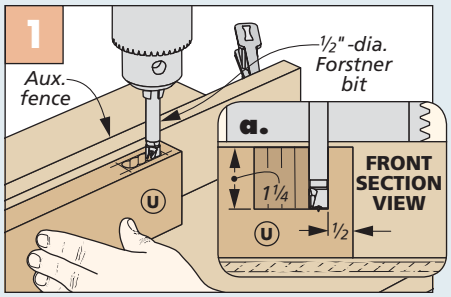

Mortise Stiles. Use a Forstner bit to remove the bulk of the mortise waste. Note the mortises are different widths.

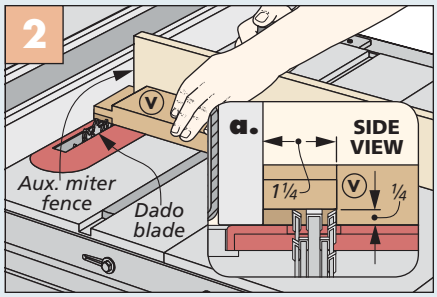

Tenons on Rails. Use a dado blade in the table saw to cut the tenons on the ends of the door rails.

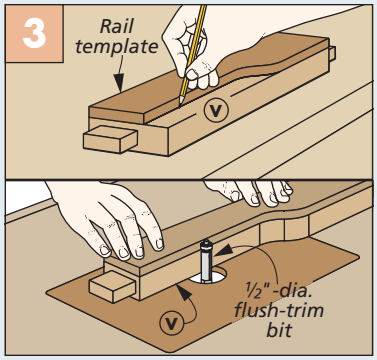

Make a Template. Create a hardboard template to trace and flush trim the cloud-lift design.

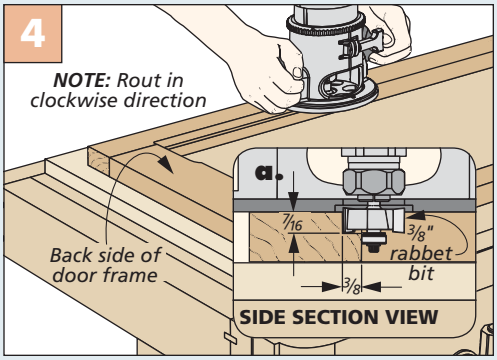

Rabbet Back of Frame. Following the profile of the frame, move in a clockwise direction to rabbet the back of the frame for the glass.

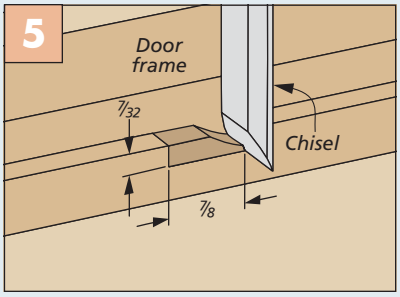

Muntin Pockets. Use a chisel to create the small pockets that hold the ends of the muntins.

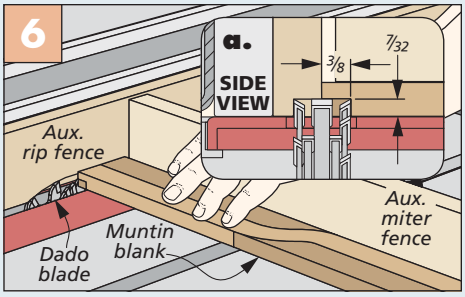

Creating Curved Muntins. Using an auxiliary rip fence as a guide, cut the rabbets on the ends of the muntin blank.

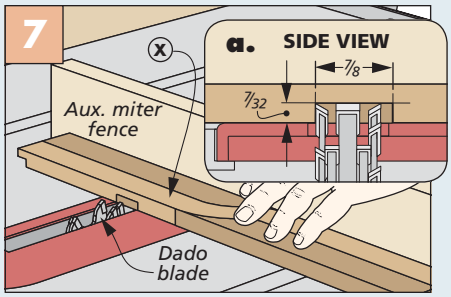

Dado in Muntins. With the dado blade still in the saw, cut the dado in the oversized curved muntin blank.

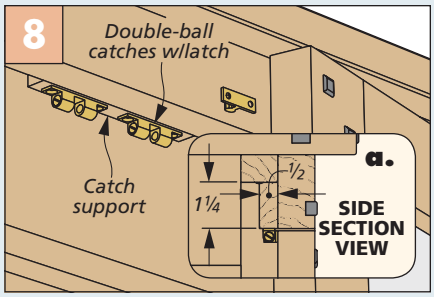

Add Catches. The catch support provides a mounting point for the ball catches at the top of the doors.

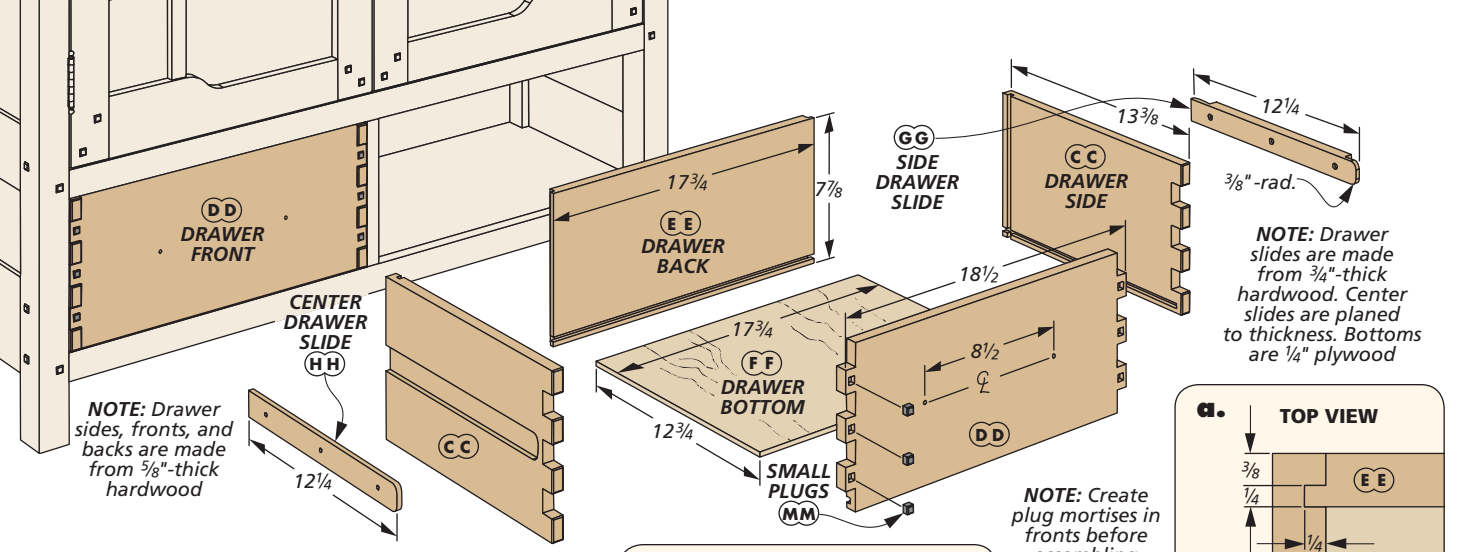

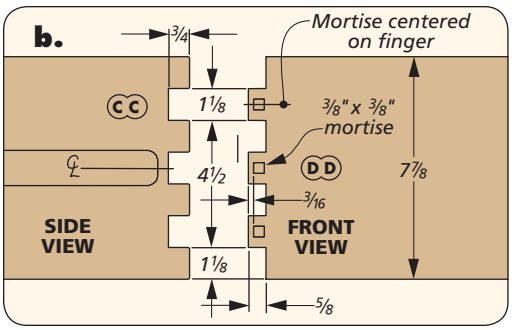

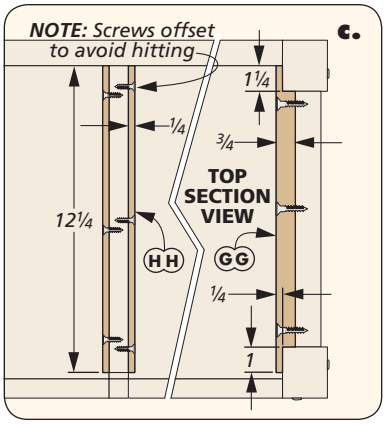

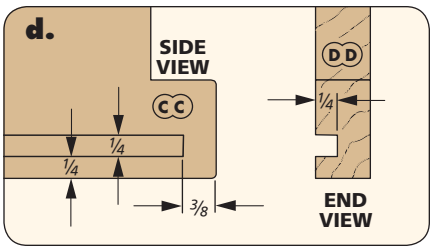

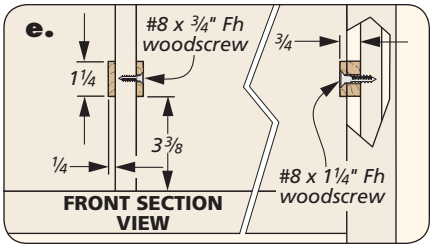

Completing the DRAWERS

The two spacious drawers that fill the openings down below aren't particularly difficult to build. But even they have their own unique design details that set them apart. The most prominent are the exposed box joints that connect the front to the sides.

LARGE JOINT, LARGE JIG. To speed up the process of creating these large box joints, I used a simple, shop-made jig, as explained in the How-To box at the bottom of the next page. The jig allows one side and one front to be routed at the same time. One detail I'll point out about the box joints — the side pins stand proud of the front and have a slight roundover, as shown in the right photo on page 43. I eased these edges before assembling the drawers.

The remaining joinery used to complete the drawers can be seen in the drawings above and the How-To box on

How-To: CUT THE DRAWER JOINERY & SLIDES

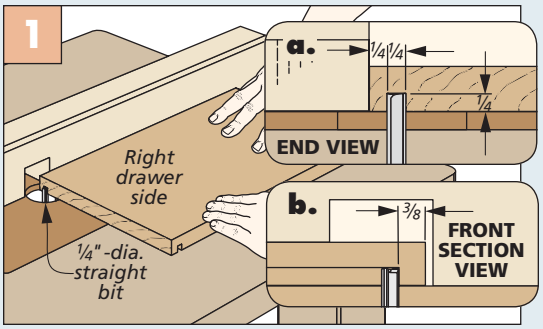

Grooves. Make the grooves in the front, back, and right side at the router table. Stop the right side groove short of the front edge (detail 'b').

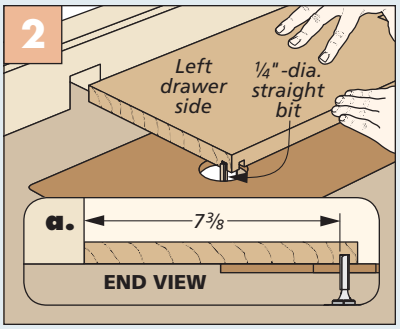

Left Drawer Side. Reposition the router fence to rout the stopped groove in the left drawer side.

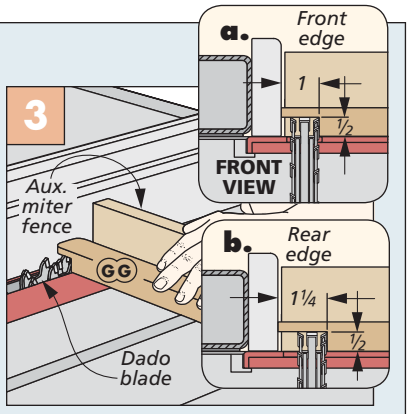

Rabbet Drawer Slides. The thicker, side drawer slides require a rabbet on both ends.

the previous page. A tongue and dado holds the back to the sides. The rabbet that forms the tongue on the back, and the dado in the sides that hold the tongue can be made in short order at the router table. But when it comes to making the grooves around the lower edge of the drawer parts to hold the plywood bottom, a little care needs to be taken.

STOPPED GROOVES. The grooves in the drawer fronts and backs are straightforward through cuts that are also easy to make at the router table (Figure 1 & 1a). The grooves in the sides, however, are stopped short of the front edge (main drawing & detail 'd'). This way, there won't be an exposed gap when the box joints are put together.

The setup for cutting the groove in the right drawer side is shown in Figure 1b on the previous page. To avoid back-routing the groove in the left drawer side, it'll be necessary to reposition the router fence before routing this groove. This setup is detailed in Figure 2.

How-To: MAKE DRAWER GROOVES

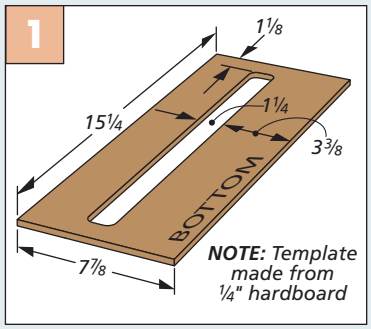

Slide Groove Template. Make this hardboard template to guide a dado clean-out bit.

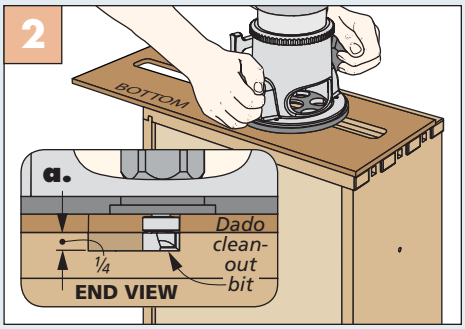

Rout the Groove. Hold the template in position using double-sided tape. Rout the groove in a couple of passes.

DRAWER SLIDES. The drawers require slides for smooth operation. So after cutting the bottoms to size and assembling the drawers, I made the slides. Note that the outer slides are thicker than the inner slides and require one extra step to complete (Figure 3, previous page) before installing.

The grooves in the sides that fit over the slides are the final piece for the drawers. The How-To box above shows how to make these grooves. A hardboard template and dado clean-out bit are just the ticket here. Now turn the page to see how to shape the drawer and door pulls.

How-To: BOX JOINT JIG

To make the large box joints on the front corners of the drawers, I made this jig that allows a drawer side and a drawer front to slide into the middle opening. A clamp across the outside holds them in place for routing the box joint finger slots on both parts at once.

The drawings and details show how to construct the jig. The far right drawing shows the proper alignment of a drawer front and side component. The lower right drawing shows the jig in use.

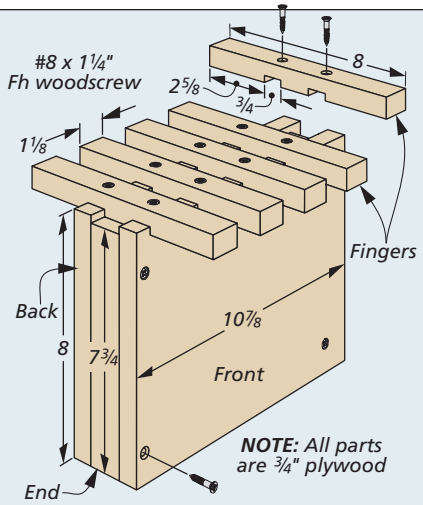

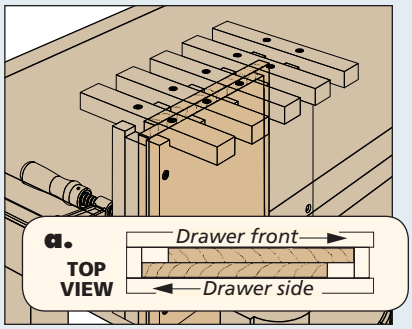

Proper Setup. Slide one side and one front into the jig and secure with a clamp after aligning.

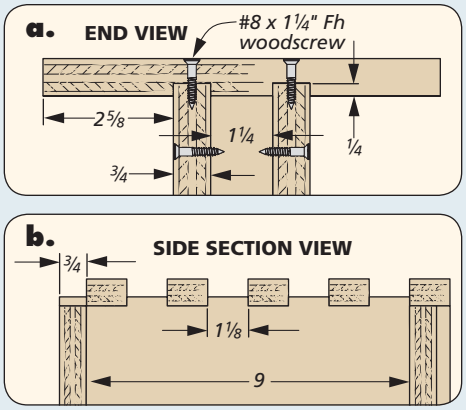

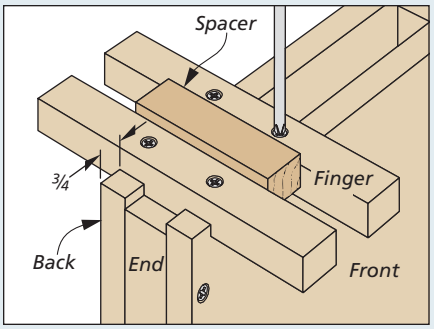

Use a Spacer. A 1⅛"-wide hardwood spacer ensures that the fingers are attached at consistent intervals.

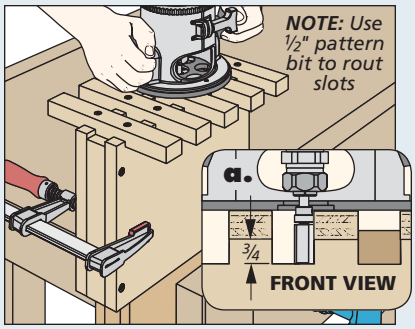

Rout Slots. With the drawer parts secure, rout the finger slots in both parts in multiple passes.

Adding the **PULLS**

The final detail needed to finish up this custom bookcase is a set of shop-made door and drawer pulls. Like the rest of the bookcase, they incorporate ebony accents. I began by making the base portion of the shorter door pulls.

LONG BLANK. Because the door pulls are short, I started by cutting a long blank to make it easier to hold onto while drilling the mortise openings (Figure 1). After removing most of the waste and squaring the mortise with a chisel, you can cut the pulls to length.

To create the rounded top edge and ends of the pulls, I used the dimensions in detail 'a' at right to lay out the curves. As shown in Figure 2, a bandsaw makes quick work of bringing them to shape and a little sanding finishes them up.

Figure 3 shows the last step of shaping the door pull base. And that's routing a cove profile along both lower edges to create a finger recess. With this done, I eased all of the edges with sandpaper to achieve a comfortable grip.

The longer drawer pulls follow much the same process as the door pulls. The steps for making them are shown in the How-To box on the next page.

ADDING FINISH & ACCENTS. You'll find the finishing information in Sources on page 67. Then it's time to add the ebony inserts to the pulls (as well as any of the remaining small plugs for the posts or drawers). I left the inserts for the pulls square and used a combination of my disc sander and hand sanding to bring them to their final shape after they were glued in place. You can see the results in the bottom photo on the next page. W

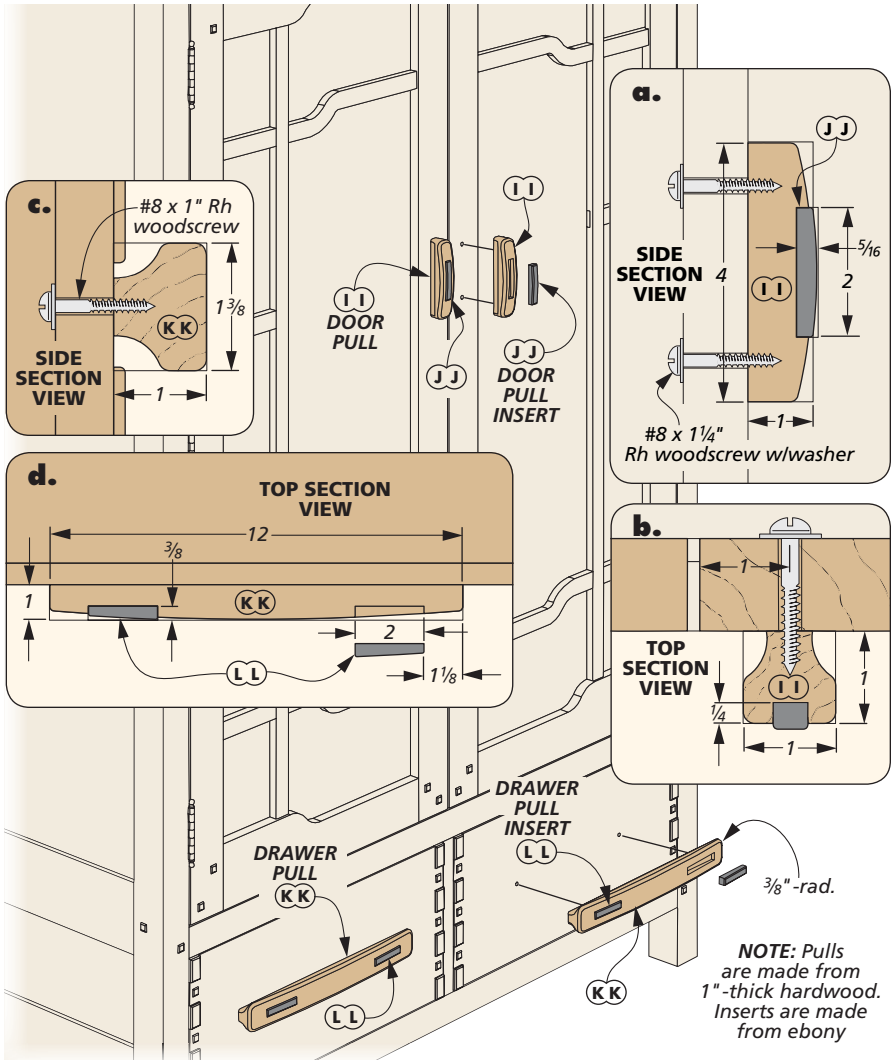

How-To: MAKE THE DOOR PULLS

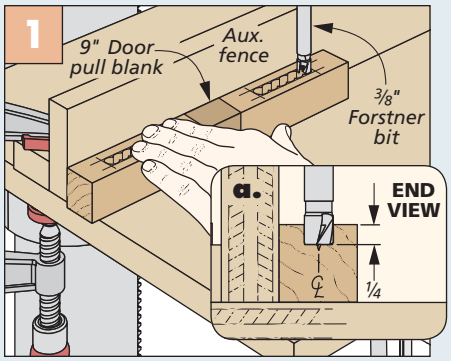

Shallow Mortise. Use a Forstner bit to remove most of the mortise waste in the oversized door pull blank.

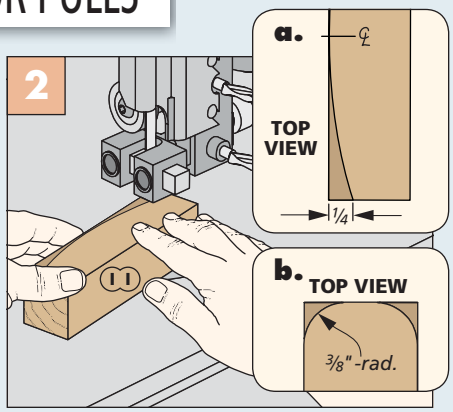

Shape the Curves. Use the band saw to cut the curves on the top and ends of each of the short door pulls.

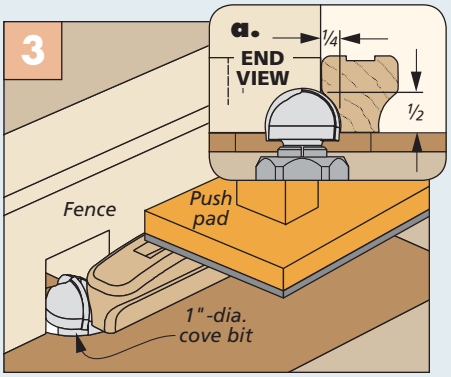

Rout Finger Groove. With a cove bit in the router table, use a push block to guide the door pull past the bit.

How-To: DRAWERS

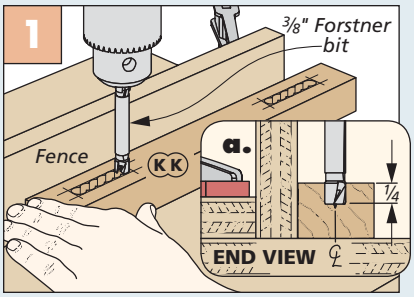

Dual Mortises. Like the door pulls, make the two mortises in the drawer pull at the drill press.

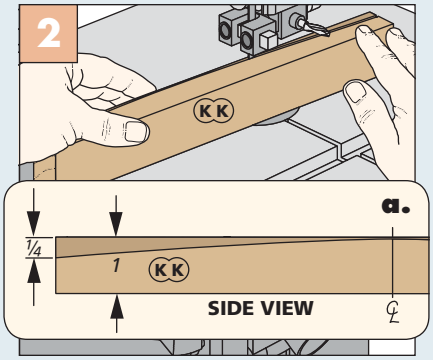

Curved Profile. Head back to the bandsaw to cut the curve on the top and ends of the drawer pull.

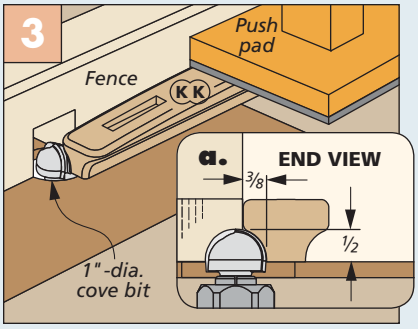

Finish Pull Profile. Use the same cove bit as on the door pulls to create the finger groove on the drawer pull.

▲ When installed and sanded to shape, the ebony inserts should stand slightly proud of the pull.

Materials, Supplies & Cutting Diagram

A	Corner Posts (4)	1 3/4 x 2 - 62
B	Upper End Rails (2)	1 x 3 - 12
C	Middle End Rails (2)	1 x 3 1/2 - 12
D	Lower End Rails (2)	1 x 5 - 12
E	Upp. End Panels (2)	3/4 ply. - 10 3/4 x 43 1/2
F	Low. End Panels (2)	3/4 ply. - 10 3/4 x 5 1/4
G	Lower/Middle Rails (4)	1 x 1 1/2 - 40
H	Upper Rails (2)	1 x 2 - 40
I	Upp. Back Panel (1)	1/2 ply. - 38 1/2 x 46 1/4
J	Lower Back Panel (1)	1/2 ply. - 38 1/2 x 8 1/2
K	Dividers (2)	3/4 ply. - 12 1/2 x 39 1/2
L	Drawer Divider (1)	3/4 ply. - 9 1/4 x 12 1/2
M	Drwr. Divider Edging (1)	3/4 x 3/4 - 8
N	Top Panel (1)	1 x 15 - 41
O	Breadboard Ends (2)	1 x 2 3/4 - 15 1/8
P	Med. Plugs (4)	3/8 x 1/2 - 2 rgh.
Q	Large Plugs (2)	3/8 x 3 - 3 rgh.
R	Splines (2)	3/8 x 4 3/4 - 3 rgh.
S	Cleats (2)	1 x 3/4 - 38
T	Shelves (3)	1 x 12 - 38 7/8
U	Stiles (4)	1 x 2 1/4 - 45 5/8
V	Rails (4)	1 x 3 1/4 - 16 13/16
W	Long Muntins (2)	7/16 x 7/8 - 39 7/8
X	Curved Muntins (4)	7/16 x 1 7/8 - 15 1/16
Y	Short Muntins (2)	7/16 x 7/8 - 5 1/8
Z	Long Glass Stops (4)	1/4 x 3/8 - 41 1/2
AA	Short Glass Stops (4)	1/4 x 3/8 - 14 5/16
BB	Catch Support (1)	1/2 x 1 1/4 - 4 5/8
CC	Drawer Sides (4)	5/8 x 7 7/8 - 13 3/8
DD	Drawer Fronts (2)	5/8 x 7 7/8 - 18 1/2
EE	Drawer Backs (2)	5/8 x 7 7/8 - 17 3/4
FF	Drawer Bottoms (2)	1/4 ply. - 12 3/4 x 17 3/4
GG	Side Drwr. Slides (2)	3/4 x 1 1/4 - 12 1/4
HH	Center Drwr. Slides (2)	1/4 x 1 1/4 - 12 1/4
II	Door Pulls (2)	1 x 1 - 4
JJ	Door Pull Inserts (2)	3/8 x 5/16 - 2
KK	Drawer Pulls (2)	1 x 1 3/8 - 12
LL	Drawer Pull Inserts (4)	3/8 x 3/8 - 2
MM	Small Plugs	3/8 x 3/8 - 48 rgh.

- (12) 1/4" Shelf Pins
- (3 pr.) 2 1/2" Door Hinges w/screws
- (2) 3/16" Glass -14 15/16" x 41 1/4"
- (6) #8 x 1 1/2" Rh Woodscrews w/washers
- (6) #8 x 1 1/4" Fh Woodscrews
- (6) #8 x 3/4" Fh Woodscrews
- (4) #8 x 1" Rh Woodscrews w/washers
- (4) #8 x 1 1/4" Rh Woodscrews w/washers
- (4) Double-Ball Catches w/screws

1/2" x 5 1/2" - 24" Ebony (.9 Sq. Ft.)

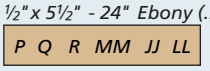

3/4" x 3" - 36" Hard Maple (.8 Bd. Ft.)

1/2" x 4 1/2" - 96" Mahogany (3.0 Sq. Ft.)

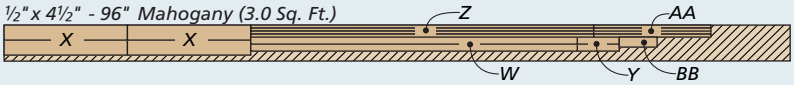

3/4" x 5 1/2" - 48" Mahogany (Two boards @ 1.8 Bd. Ft. each)

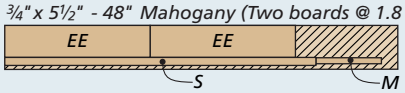

3/4" x 4 1/2" - 96" Mahogany (Two boards @ 3.0 Bd. Ft. each)

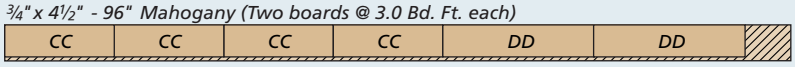

1" x 6 1/2" - 60" Mahogany (Two boards @ 3.4 Bd. Ft. each)

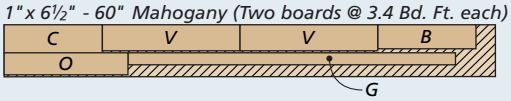

***ALSO NEEDED:** Two 48" x 96" sheets of 1/4" mahogany plywood. One 48" x 96" sheet of 3/4" mahogany plywood*

1" x 5 1/2" - 84" Mahogany (4.0 Bd. Ft.)

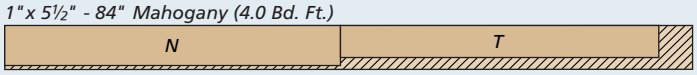

1" x 5" - 96" Mahogany (Two boards @ 4.2 Bd. Ft. each)

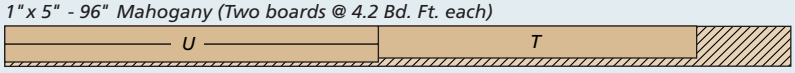

1" x 5 1/2" - 96" Mahogany (Two boards @ 4.6 Bd. Ft. each)

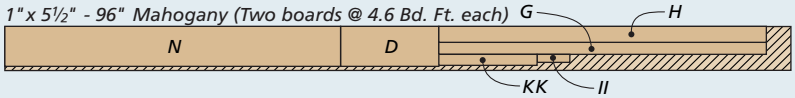

1 3/4" x 5" - 72" Mahogany (Two boards @ 5.0 Bd. Ft. each)

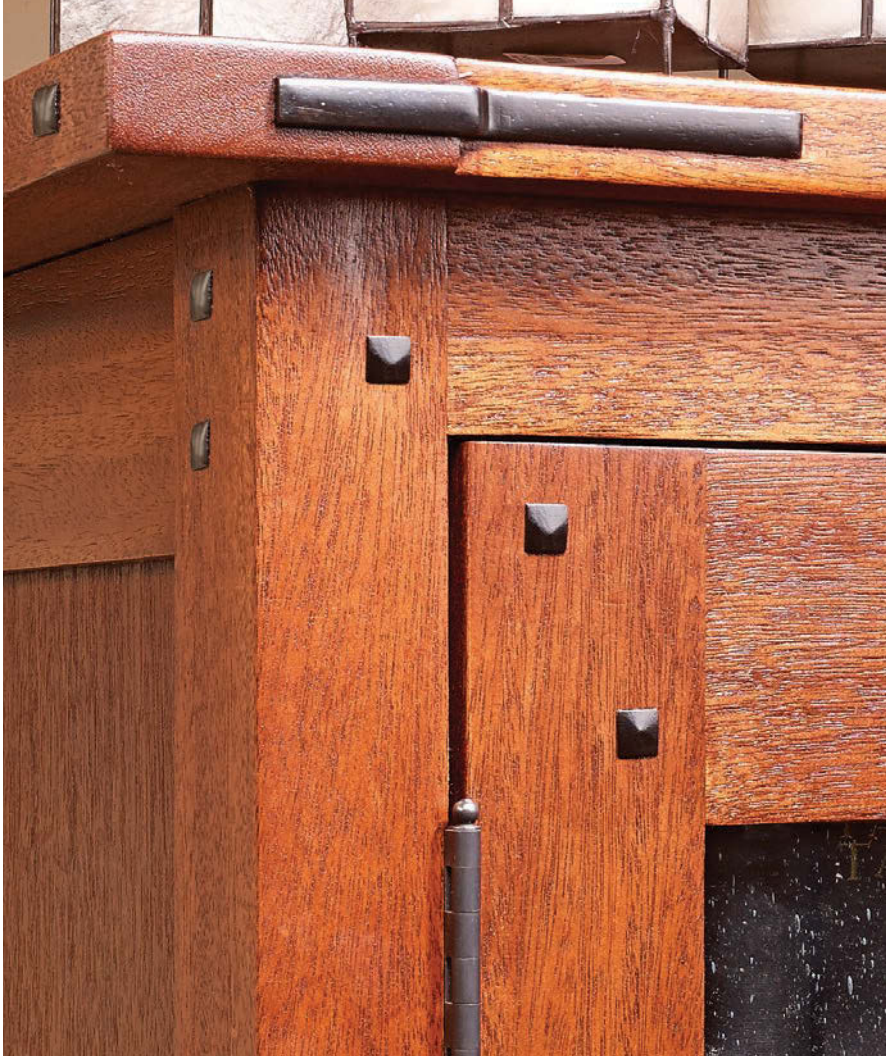

making & installing Square Plugs

Adding hardwood accents to a project is one way to really make a furniture piece shine. The ebony plugs that I used on the Greene and Greene-style bookcase on page 42 are one example of what I'm talking about. These square plugs are such a simple idea, but the visual benefits add a complex dimension. While they're a simple concept, installing them requires a bit of patience.

MAKING SQUARE HOLES. Now, of course there are multiple ways you could go about creating the square holes and making the square plugs to fit. If your shop is so equipped, a mortising machine will knock out all 60 square holes in no time. But there's another method that doesn't require investing in an expensive mortising machine.

DRILL & PUNCH. This method uses a square hole punch (much like a mortising chisel) that'll shape the opening with just a couple hammer blows. The process is really quite simple.

After drilling an undersized hole at the plug location, remove the bit from the drill and insert it back into the hole.

Slip the hole punch over the drill bit and use a square to align the edges of the punch with the edges of the workpiece.

When the punch is squared to the workpiece, remove the drill bit and tap the punch to form the square hole.

Rip 3/8"-square "sticks" of ebony to size at the table saw. Use a push block to keep your hands well away from the blade.

After building this sanding jig (Shop Notes, page 64), crown the ends of the ebony sticks by rotating them in the hole.

When you're done crowning the end of several sticks, polish the ends on a buffing wheel to give them a burnished look.

The three photos at the bottom of the previous page show the process. You'll start by drilling a hole that's 3/64" smaller than the size of the square punch. In the case of our 3/8" punch, a 21/64" bit is needed.

After drilling the shallow hole, place the bit back in the hole. Slip the square punch over the drill bit and, using a try square, align the punch square to the workpiece. Now simply pull the drill bit out of the hole and lightly tap the punch a few times to form the square hole. Be sure to pull the chisel straight out of the hole to avoid damaging the edges. A small bench chisel can then be used to clean out the remaining waste material.

CREATING THE PLUGS. To create the plugs, start by making several 3/8"-square "sticks" (Photo 1). I then used a couple of jigs to crown the ends of the sticks and cut the plugs free.

The first jig you'll need to make fits on the a disc sander (Photo 2). You can find detailed instructions for making this jig in Shop Notes on page 64. The purpose of this jig is to hold the hardwood sticks at the proper angle so as to just slightly crown the end. You'll do this by placing the stick in the hole and rotating it. When you're satisfied with the shape, buff the crowned end using a buffing wheel (Photo 3). This gives the plug a smooth, burnished look.

Make a shallow kerf cut on all four sides of each stick. This plywood jig and clamp holds the sticks in place.

Reposition the stick to slightly back-bevel each plug before cutting them free. The bevels help the plug fit tightly in the hole.

Next, I made the platform jig shown in Photos 4 and 5. With one of the sticks clamped in the jig, I cut a shallow kerf in all four sides to form the bottom edge of one plug (Photo 4). I then back-beveled each side (Photo 5) before cutting them free with a handsaw. The bevel makes installing the plugs easier. You can get the idea of what the finished plugs should look like in the How-To box at left.

INSERTING THE PLUGS. When inserted in the square holes, the plugs should be slightly proud of the surface. To maintain a consistent depth, I used the method shown in the How-To box at left. You may have to experiment to get the right plug depth. W

How-To: INSTALL THE EBONY PLUGS

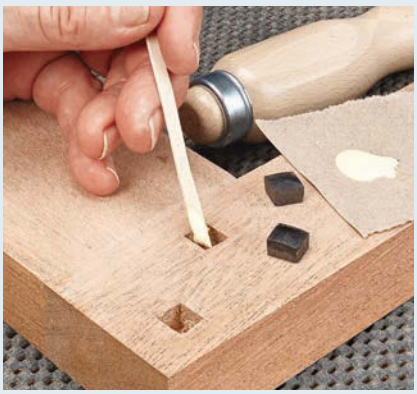

Use a small applicator to apply a dab of glue in the square hole. Don't overdo it as the excess is tough to clean up.

A scrap of wood with a shallow groove cut near the end acts as a gauge for inserting the plugs to the proper depth.

5 workholding solutions for your Drill Press

In the lineup of workshop machinery, the drill press doesn't tend to get the same attention as other power tools. And maybe that has something to do with the fact that using a drill press is fairly simple in comparison to a table saw or router table. You simply flip the switch and lower the spinning bit down onto a stationary workpiece. But this is where the challenge can lie — in holding the work steady. Most of the time, this is simply a matter of maintaining a firm grip on the workpiece. But in some cases, you'll need a little assistance, either to get more accurate results or simply for safety. Here's a look at five solutions — some shop-made and some purchased — to a few common workholding challenges. (You'll find sources for some of these products on page 67.)

V-BLOCK. Holding a round workpiece steady (like a dowel or turned leg) while drilling a hole isn't easy. The workpiece wants to roll or tip as you start drilling. A simple solution is to make a V-block like the one shown above. It's nothing more than a scrap of 2x4 stock with a V-groove cut down the center. You can cut the V-groove at the table saw by tilting your blade to 45°.

To use the V-block, I like to start by centering the groove directly under my drill bit. Then I bring a fence right up behind the V-block to hold it in position. With the workpiece safely cradled

◄ A long-reach, locking lever clamp provides plenty of clamping pressure without getting in the way of the drill chuck.

in the V-block, I can drill a centered cross hole without worrying about the piece shifting or rolling.

VISE CLAMP. There are a number of clamps and hold-downs on the market that come in handy at the drill press. But the problem with most of these is that if you need to clamp something fairly close to the drill chuck, they tend to get in the way. That's not the case with the locking-lever clamp in the lower left photo on the previous page.

The clamp bolts directly to the drill press table. The long reach of the clamp allows you to position it close to the drill chuck, where you typically need the most clamping pressure. It's a handy solution when typical clamps won't do the job.

DRILL PRESS VISE. Drilling angled holes is never fun at the drill press. It's a pain to tilt the table and then have to hold the workpiece securely on an angle. And when you're done drilling, you have the hassle of squaring up the table to the bit again. For angled holes, I find it easier to leave the table flat and tilt the workpiece. And an easy way to do that is with an angle drill press vise, like the one shown in the photo in the upper right. This type of vise bolts to the table of your drill press and can be quickly swiveled for drilling angled holes.

Although drill press vises are usually thought of as a tool for holding metal, they work just as well for holding wood parts. (Just make sure you use clamp pads to prevent the jaws of the vise from marring your workpiece.)

RIGHT-ANGLE SUPPORT. Every so often, a project will call for a hole to be drilled in the end of a workpiece or on the edge of a panel. You can use a hand-held drill for this, but the results are often less than precise.

There's a better method, though: Simply add a right-angle support to the edge of the drill press table, like the one shown below. Then, you can swing the table to bring your workpiece into alignment with the bit.

The right-angle support is easy to make. As you can see below, it's nothing more than an L-shaped plywood assembly with a couple of angled braces to support the fence. A cleat screwed to the front of the fence helps keep the workpiece square with the drill bit. Simply position the support so that it overhangs the drill press table and clamp it in place. Then clamp your workpiece to the support.

HANDSCREW FOR SMALL PARTS. Probably one of the most common challenges I face at the drill press is holding onto small parts. Most clamps or hold-downs are too large to use effectively, and trying to hold this piece by hand can be problematic. A part is often too small to afford a good grip. And even if I can hold it, I don't like having my hands that close to the spinning bit.

A simple solution is to clamp the workpiece between the jaws of a small handscrew, as shown in the lower right photo. The handscrew not only grips the workpiece securely, but it's easy to hold onto while drilling. I keep one at the ready by my drill press.

I'll admit that drilling tasks I've covered here aren't ones that come up every day. But it's nice to know that you have a solution or two in your back pocket for when they do. W

An angle drill press vise provides a convenient way to drill accurate angled holes without having to go through the hassle of tilting the table of your drill press.

A simple plywood right angle support can be clamped to your drill press table so that it just overhangs the edge. It's invaluable when drilling a hole in the end of a long workpiece.

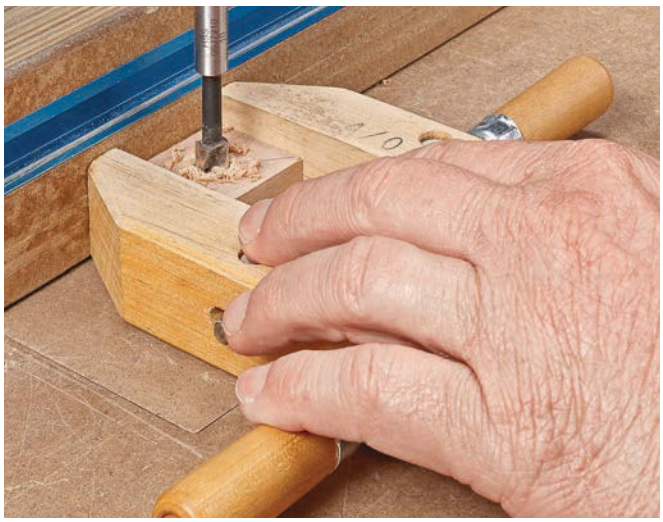

When it comes to drilling holes in small workpieces, a wood handscrew makes a handy holding device. The wide, square jaws of the handscrew also register against the fence and table.

the secret power of The Planer

Along the path of building projects in the shop, you'll find there's a core set of tools that are indispensable. These tools are the cornerstones that, when properly used, give you confidence knowing that you're heading in the right direction towards a high-quality, well-built project.

OFF TO A GOOD START. One of these tools is the thickness planer. The planer is normally considered part of the trio that you use to prepare lumber for a project. A broad brush view of that process goes like this: Flatten the first face with the jointer, bring the material to thickness with the planer, then back to the jointer to square one of the edges to the face. Finally, cut the board to size on the table saw. There's no doubt that the planer is a perfect partner in that setting. Here, I'm going to show you a handful of other reasons why adding a planer to your shop is a sound decision. But to start, let's take a moment to look at how the planer works.

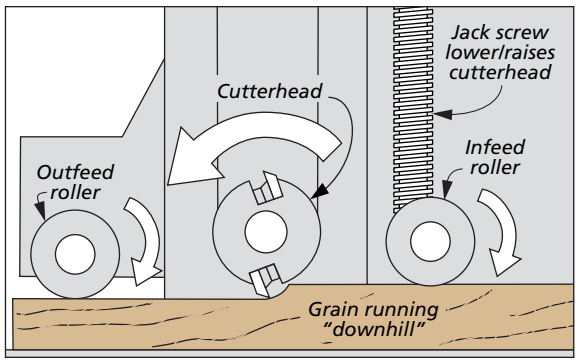

ANATOMY. The planer is not a complex tool. It has a cutterhead with knives that shear the wood as it passes through. On either side of the cutterhead, rollers control the rate of feed into the cutterhead and out of the planer. Although the particulars will vary from brand to brand, the lower left drawing captures the gist of what's going on inside a planer. To control the thickness, these combined components can be cranked up or down and locked in place. Most models have a scale with a pointer that shows you how thick you're planing. Beneath the board is a smooth surface with infeed and outfeed tables that support the wood during the process. Now let's look at what the planer can do.

SAVE MONEY. The planer earns its keep in several ways that you'll find attractive. First, saving some cash by surfacing your wood from rough-cut lumber. Often lumberyards and wood suppliers will have lumber prepared to different degrees of finish.

Rough-cut lumber is usually the most cost effective because other than drying, all of the milling work is left to you.

Lumber thicknesses can vary even when coming from the same bin. This can happen at lumberyards and home centers.

After establishing how thick you want the boards to be, it's just a matter of planing from the thickest to the thinnest.

Having a stack of boards that are uniform in thickness will always get you off to a good start with any project you want to tackle.

At the other end of the scale, S4S lumber (this is lumber that has been planed on both faces, and the edges are jointed square) is sold at a premium because of the extra labor involved in processing it.

SAVES TIME. Also, a planer can be a timesaver. There have been many times that I've had a board that is nice and flat but has a few surface defects. Or, it's a leftover from a past rough lumber purchase (photo at right). At any rate, all it takes is a few passes through the planer to accomplish what would have taken much more time with a sander.

A UNIFORM POLICY. Another big advantage with a planer is consistency in thickness. It's not uncommon to find slight variations in the thickness of boards, even if they're purchased from the same source (upper left photo). A planer can quickly make them uniform. This starts by organizing the boards you're working on from thickest to thinnest (the thinnest still being slightly thicker than what's needed), as the middle photo above shows. Then you set the planer to mill the thickest board first. As you lower the cutterhead, each board will come into range. When you've planed the last one, you'll have a set of boards perfectly uniform in thickness (upper right photo). This tactic takes a lot of the headache out of fitting parts together in any project.

PLANER POWER. The designers here at *Woodsmith* are a talented bunch. I always look forward to the designs that they produce. And part of the secret to creating such attractive projects is in scaling the thickness of the stock used for the various parts.

Instead of settling for the pre-surfaced material thickness supplied by the lumberyard, they take matters into their own hands and dimension the wood to better fit the design of the project. The tool in the shop that's their ally for this is the thickness planer. The box below gives some basic information on making thin stock. To me, all this is plenty of reason to expand your shop with the addition of a planer. W

A beat up board or piece of rough lumber can quickly be brought back to life. All it takes is a few passes through the planer.

How-To: PLANE THIN STOCK

Most planers can plane stock down to ⅛" or ¼" thick. It has to do with how low the cutterhead will go. If you need material that's thinner than that, here's an old trick that solves the problem easily.

Attaching the wood to a piece of plywood (as shown in the drawing at right) raises the workpiece up into the range of the cutterhead.

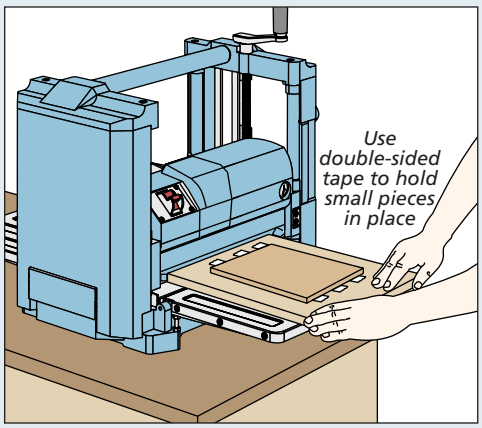

Smaller projects, like this tray, owe a lot to the planer. Controlling the thickness of the material lets you design an appealing project every time.

Choosing
Specialty Blades

The table saw is the cornerstone of most woodworking shops, that's a given. So investing in a quality table saw that fits the profile of the work you do in your shop is important. Once you've checked that off your list, choosing the blades to go with the saw is the next order of business. As a starting point, it's safe to say that most woodworking tasks can be done with three blades; a good combination blade, a rip blade, and a crosscut blade for the finer work. (A good dado set is important, as well.)

But as you expand your shop, you'll most likely have some specialized needs that require an additional blade or two. As you see below, you have plenty of options. Here, I'm going to visit the next level of blades that'll give you safe and clean results.

BOX JOINTS. Many woodworkers use a standard dado blade to make box joints. But if you're doing a lot of box joint work, there's a two-blade box joint set available that puts you on the fast track to crisp, well-made work.

The photo above shows a set of identical blades that make easy work out of creating ¼" or ⅜"-box joints. These blades have ¼"-wide carbide teeth that are ground square. (The cutter blades in a dado set, on the other hand, are ground differently to make clean cuts across the grain.) One blade is all it takes to make ¼"-wide joints. When you stack the set together, you can make ⅜"-wide box joints.

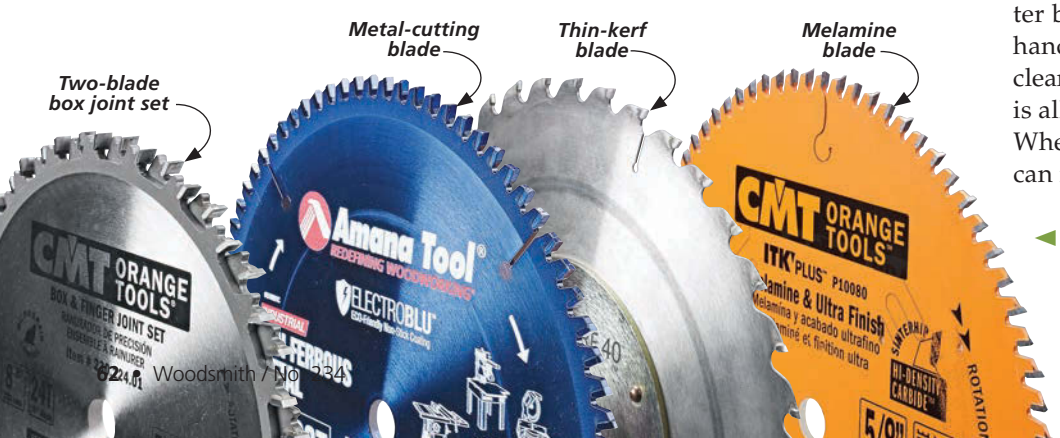

◄ Any one of these four specialty blades is deserving of a spot in the line-up of blades for your table saw.

▲ Cutting metal at the table saw is no big deal if you have the right blade. Whichever metal-cutting blade you choose, remember hot metal and sawdust don't mix. Clean the saw cabinet and don't run dust collection when cutting metal.

▲ Thin-kerf and micro-kerf blades let you rip and reglue boards without disrupting grain pattern. They also take less energy to run.

METAL-CUTTING BLADES. There are lots of tools in the shop that tackle metal head on. The drill press, jig saw, and even the lowly hack saw come to mind. But the idea of cutting metal on a table saw may sound a little intimidating at first. However, with the right blade, (photo, top left) cutting certain types of metal can be done. First off, iron and steel (ferrous metals) are off limits. But non-ferrous metals — copper, brass, and aluminum, are fair game.

The basics of a metal-cutting blade are a high number of carbide teeth (typically 80) that are less brittle than the teeth on woodworking blades. The teeth have a negative hook, which means they tilt back slightly. As you see in the detail above, the negative hook takes a less aggressive cut. The way the teeth are ground (flat, and triple chip grind) also contribute to a quality cut.

THIN KERF. Thin-kerf blades started out in the domain of portable saws. They were designed to cut efficiently on saws that didn't have a lot of power. This blade family continues to grow and has moved beyond small and portable saws. Due to improvements in blade technology, they have all the positives that their thicker counterparts have. If you have a small portable saw, stick with the thin kerfs and don't be afraid to use them on your contractor or cabinet saw as well. The blade that's in the photo above is a "micro" kerf blade. I use a blade like this when I'm ripping a blank apart and regluing it together to minimize grain disruption and waste.

MELAMINE BLADES. When it comes to cutting surfaces that are prone to chipping, like melamine or plastic laminate, there are blades that are designed to help you navigate this often frustrating task (photo, below left). As with the metal-cutting blades, melamine blades have lots of teeth. But as you see in the detail below, the top bevel angle on the teeth can be as steep as 40°. This knife-like pitch shears the melamine or plastic to a razor-like edge. In the sources section on page 67, you can find the details on the blades shown and used here. W

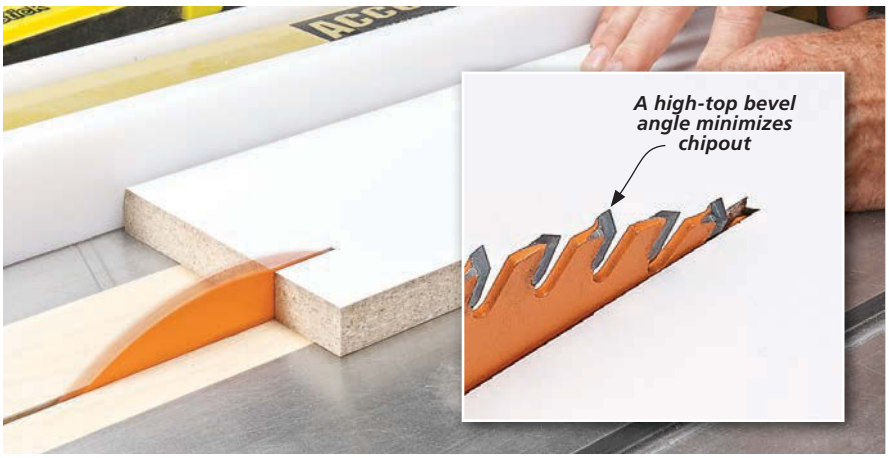

▲ Whether you're cutting melamine, laminate, or any other brittle surface material, there are blades that are up to the task. These blades will give you clean, chip-free cuts. If you find you're cutting a lot of this type of material, you'll be happy you made the investment.

THE "SCRAPPER"

Like a scrappy street fighter that can punch its way through anything, I keep an old steel rip blade around for dirty work. It gets called into duty when cutting up reclaimed lumber that may have nails or grit embedded in the surface.

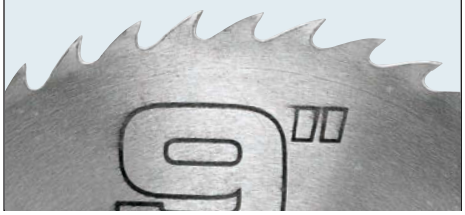

tips from our shop

Shop Notes

Plug Sanding Jig

Adding contrasting hardwood accents to a furniture project is the focus of the article on page 56. There, you learn how to create the mortise, make the accent plugs, and install them in the Greene and Greene-inspired bookcase featured on page 42.

However, making the plugs requires an assist from the jig shown in the photo above. Used with a disc sander, the jig acts as a guide for holding an extra-long plug blank at the correct angle while one end is rotated against the sanding disc.

The goal is to slightly crown the ends of the blank before polishing the end on a buffing wheel. The plugs are then back-beveled before they're cut free of the blank and glued into a shallow mortise in the project.

QUICK BUILD. The plans below are for a jig that fit my disc sander table, but it can easily be modified to fit other styles. The height of the riser can also be changed to give the plugs a more "faceted" appearance if you prefer.

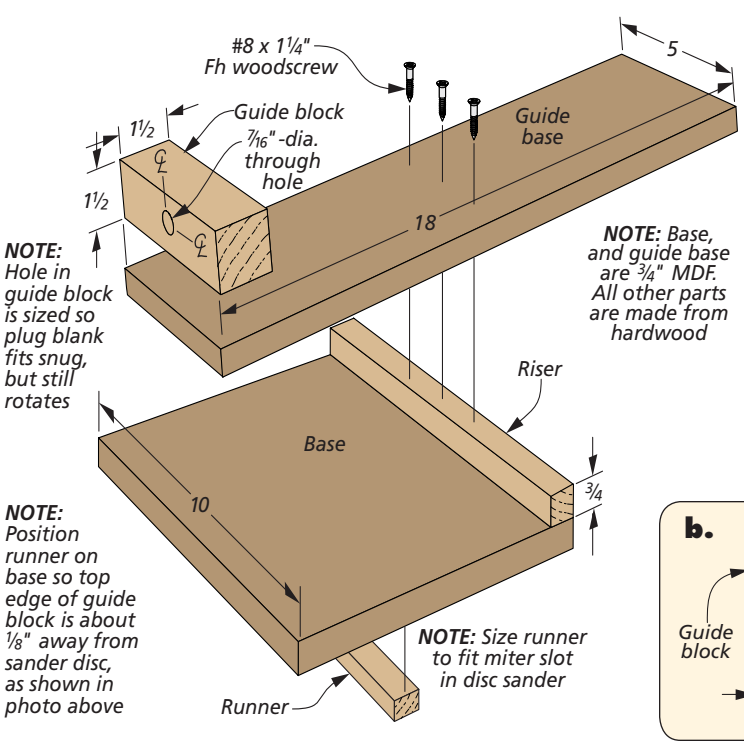

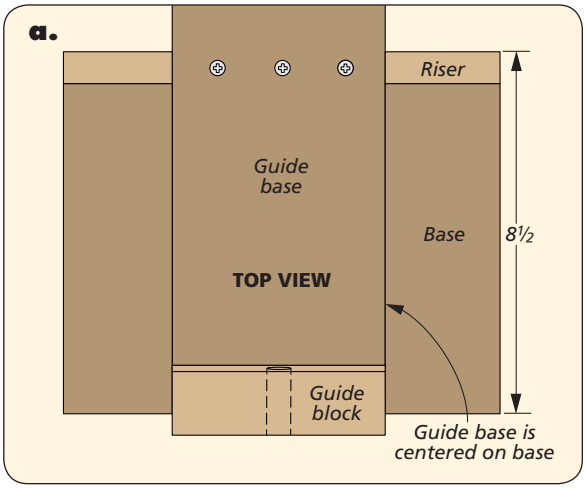

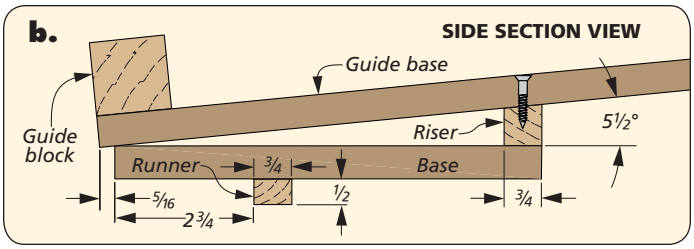

Routing Door Frame

The door frames for the Greene and Greene bookcase on page 42 have a large panel of glass recessed in a rabbet on their back face. Because of the cloud-lift design detail in the door rails, a little extra work is required to make the rabbet in order to get the rectangular glass panel to fit the opening.

PROFILE FIRST. I removed the bulk of the waste for the rabbets using a rabbeting bit in a hand-held router, as shown in Figure 1. Here, you simply rout in a clockwise direction, following the profile of the opening.

CLOUD-LIFT WASTE. This leaves a little "bump" of waste material that still needs to be cut away. To solve this problem, I made a simple L-shaped fence that provides a bearing surface for my router base to ride against (Figure 2).

After switching to a straight bit in the router, clamp the fence in position as shown and make a few passes to remove the rest of the material behind the cloud lift. Now, a rectangular piece of glass can fit in the opening.

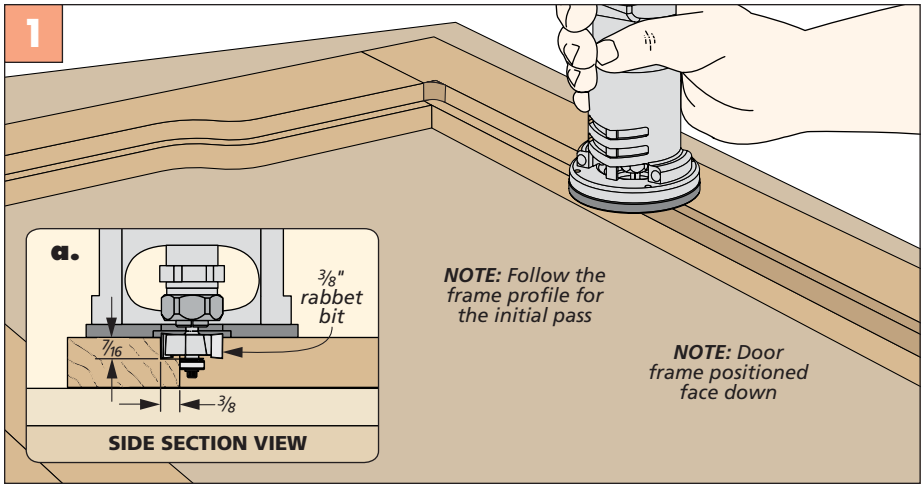

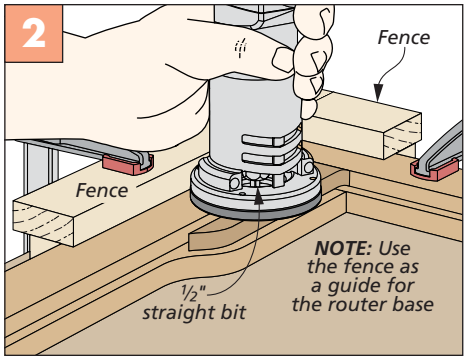

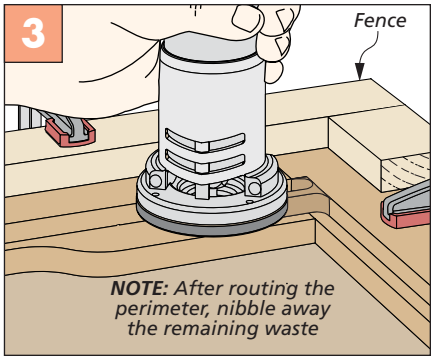

Tapering Small Pieces

The stretcher pin that holds the stretcher in place between the legs of the sofa table (page 28) is a small piece of hardwood. It's so small that I didn't feel safe holding the piece by hand to make the taper cuts at the table saw.

I found an easy way to remove any risk while cutting the tapers. The sled you see below lets you safely and accurately cut the tapers on the pin.

THE SLED. Three pieces of plywood, a handful of screws, and a toggle clamp are all that's needed to make the sled.

The stop block and the fence block are positioned on the sled using the stretcher pin for positioning. To do this, cut the stretcher pin to its final length, and draw the taper location on one end. Figure 1 shows the size of the taper. Now position the pin on the base so the taper aligns with the edge of the base. Then you can bring in the blocks and fasten them in place. Follow this by installing the toggle clamp.

SIMPLE OPERATION. Using the sled is a straightforward process. Simply set the pin against the blocks and lock it in place with the toggle clamp. After one end is cut, flip the pin end for end in the sled and repeat the cut.

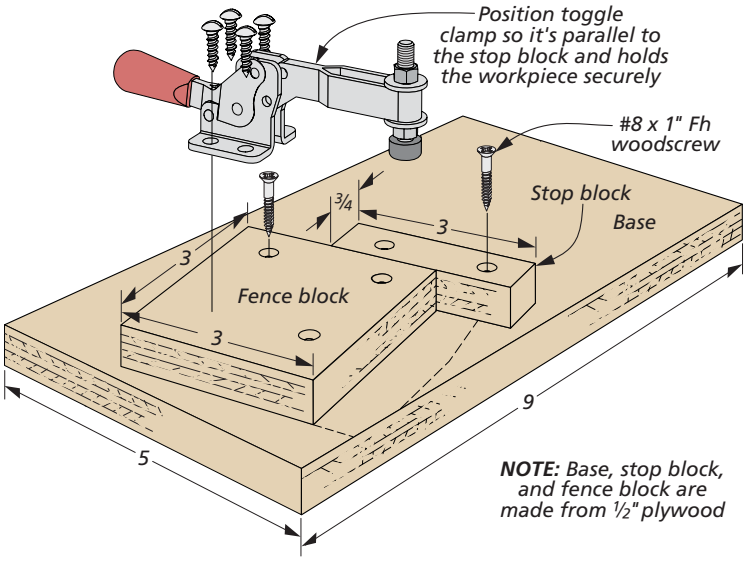

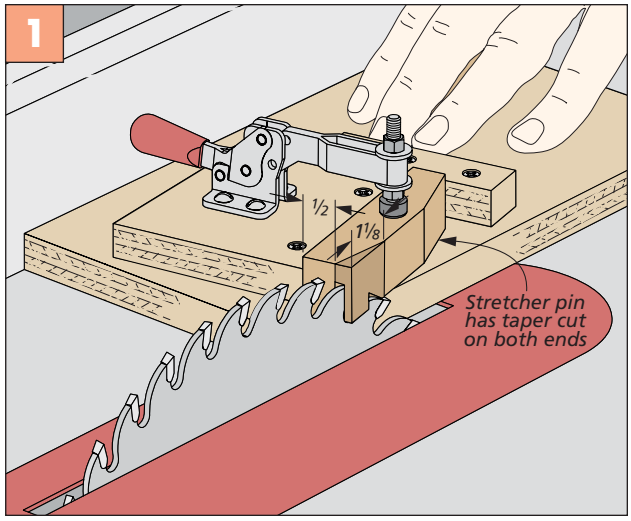

Routing Hinge Mortises

The doors for the Greene and Greene-style bookcase featured on page 42 are attached to the case using three pairs of butt hinges. The hinges are recessed in shallow mortises in the posts and the door stiles. To create the mortises, I made the jig shown at right for use with a router. The jig is sized so that it can be used for making the mortises in both the case and the doors. It consists of two cleats attached to a base. The base has an opening along the edge to match the size of the hinge leaf.

ROUTING MORTISES. I started by making the mortises in the posts (Figure 1). I found it best to lay the case on its side for better control. After routing the mortises on both posts, I held the doors against the case to mark the mortise position on them, as shown in Figure 2. You can then clamp the jig to the door frame to rout the hinge mortises at each location (Figure 3). A chisel is used to square up the corners.

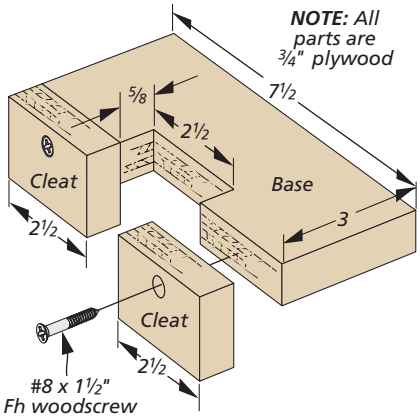

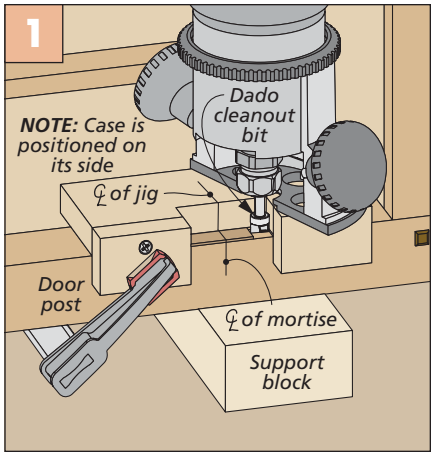

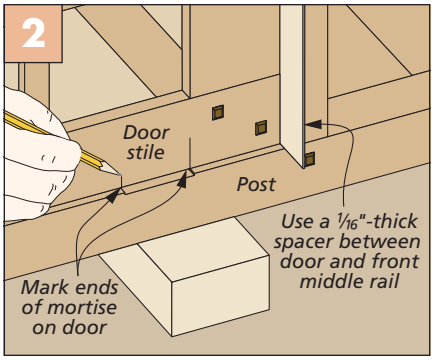

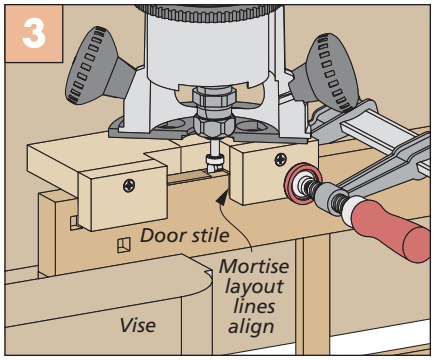

Creating Slots

The slots in the top of the drawing table on page 22 are formed in a three-step process. After laying out the slots, drill out the ends using a Forstner bit in the drill press, as in Figure 1. For the second step, remove most of the waste with a jig saw, staying just inside the layout lines.

The final step is shown in Figure 2. Attach hardboard straightedges aligned with the layout line. Then use a pattern bit to trim the edges of the slot flush.

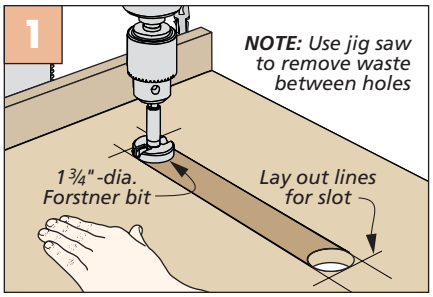

Drill the Ends. A Forstner bit easily forms a smooth, rounded radius on each end of the slot.

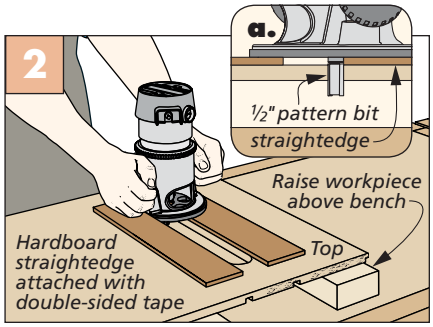

Rout it Smooth. Once most of the waste has been cut away, a router cleans up the edges of the slot.

Making Drawer Pulls

I wanted low-profile pulls for the drawing table drawers (page 22) that wouldn't get in the way while working.

So I came up with a simple design that uses a flattened dowel as the pull. The only challenge is figuring out a way to flatten one side of the dowel at the thickness planer without it rotating. The solution is shown in the drawing. I made a V-block from a piece of "two-by" stock. The groove cradles the extra-long dowel blank. A little hot-melt glue (or double-sided tape) holds the dowel in place. While you aren't removing a lot of material, it's still a good idea to take several light passes. This ensures a clean, smooth cut, and prevents chatter.

The blank can then be removed from the block. The flat spot keeps the blank stable while mitering the handles to size. W

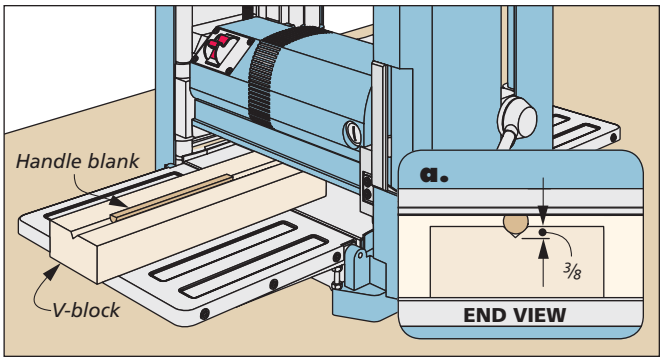

Just a Trim. Use hot-melt glue or a strip of double-sided tape to secure the handle blank in the V-block. Then take light cuts to trim the blank to the correct size.

hardware & supplies
Sources

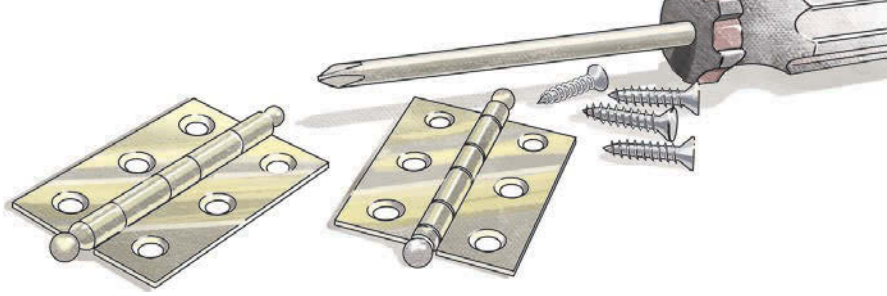

Most of the materials and supplies you'll need to build the projects are available at hardware stores or home centers. For specific products or hard-to-find items, take a look at the sources listed here. You'll find each part number listed by the company name. See the right margin for contact information.

HANDLING SHEETGOODS *(p.14)*

- **Rockler**
  Gorilla Gripper 32065
  Material Mate 56889
- **Amazon**
  PortaMate B01AWI8ILW
  Speed Skate B00MEJ8YFS

SALT & PEPPER SET *(p.18)*

- **Woodcraft**
  Pump-n-Grind Mill 159013
  25mm Forstner Bit 151282
  Forstner Bit Ext. 145705W
  HUT Crystal Coat 141049

The mills are finished with *HUT Crystal Coat*. The stand was sprayed with two coats of lacquer.

DRAWING TABLE *(p.22)*

- **Woodworker's Hardware**
  Table Supports . . . SYX7020005Z
  Cont. Hinge C11248
- **Lee Valley**
  Rocker Switch 00U4205
  Wire Connector 00U4149
  Wire Clip 00U4143
  Light Tape 00U4125
  Power Supply 00U4188
- **Regal Plastics**
  3015 Acrylic . . 142125489630151

The drawing table was sprayed with two coats of dull lacquer.

SOFA TABLE *(p.28)*

Before staining the sofa table I applied a coat of *Old Masters* sanding sealer that was cut 50/50 with mineral spirits. When that was dry, I sanded the surface from 400- up to 600-grit sandpaper. Then I cleaned the surface with a tack cloth.

After taping off the sofa table to stain the breadboard ends and stretcher pins I applied two coats of *General Finishes* "American Walnut" (oil base) stain.

When that was dry, I taped off the ends and pins. The base and top are stained with one coat of *General Finishes* "Honey Maple." Then, I sprayed on a couple coats of clear lacquer.

PLYWOOD PROJECTS *(p.36)*

The workbench and tool shelf were finished with *General Finishes* "Tuscan Red" milk paint. Non-painted surfaces are finished with spray lacquer.

BOOKCASE *(p.42)*

- **Lee Valley**
  Double-Ball Catches . . 00W12.02
- **Horton Brasses**
  Hinges (dark antique) . . PB-409B

The bookcase was stained with a mixture of equal parts *General Finishes* "Brown Mahogany" gel stain and *General Finishes* "Candlelight" gel stain. Then, I sprayed on a couple coats of clear lacquer. I purchased the glass for the doors from a local glass supplier.

DRILL PRESS SOLUTIONS *(p.58)*

- **Lee Valley**
  Vise Clamp 16F02.20
  Angle Vise 70G11.01

SPECIALTY BLADES *(p.62)*

Many blade manufacturers have a version of the blades we highlighted in the article. The blades listed here are the ones that appeared in the article.

- **Amazon**
  CMT Box Jt. . . . B00DPE9ZMW
  Amana Metal B000P4QHAI
  CMT Melamine . .B012VQBYJG
- **Total Saw Solutions**
  Micro-Kerf 40 . . . . . MK1040625

The Complete *Woodsmith* Magazine Collection *1979 to 2017*

- ✓ **Access Every Issue, Article, Photo, and Illustration Ever Published!**
- ✓ **Every Plan, Tip, and Technique, Everything You'll Ever Need!**
- ✓ **Instant Online Access on Your Computer, Laptop, Tablet, or Smartphone!**

Item #WL07U

Woodsmith, The Complete Magazine Collection on USB Flash Drive...$99

MAIL ORDER SOURCES

Project supplies may be ordered from the following companies:

amazon.com

General Finishes
800-783-6050
generalfinishes.com

Horton Brasses
800-754-9127
horton-brasses.com

Lee Valley
800-871-8158
leevalley.com

Regal Plastic
800-444-6390
regalplastic.com

Rockler
800-279-4441
rockler.com

Total Saw Solutions
800-773-3133
totalsawsolution.com

Woodcraft
800-225-1153
woodcraft.com

Woodworker's Hardware
800 - 383-0130
wwhardware.com

looking inside
Final Details

▲ *Salt & Pepper Dispensers.* A high-quality grinder mechanism and a couple hours at the lathe result in this cool little project. Plans begin on page 18.

▲ *Bookcase.* Tune up your woodworking skills by building this Greene and Greene-inspired bookcase. It features several unique design details. We'll walk you through building it beginning on page 42.

▼ *Sofa Table.* Although modern in appearance, this table goes together using traditional joinery. You'll find step-by-step instructions starting on page 28.

▲ *Lighted Drawing Table.* If pencil and paper are your go-to items for designing projects, then this clever drawing table might be up your alley. With LED backlighting and easy adjustability, you'll be turning out drawings like a pro. The two drawers underneath hold all your supplies. Turn to page 22 to build it.